Packo
Pumps

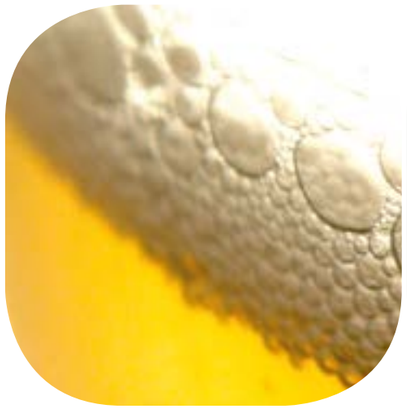

Food Pumps

Stainless steel centrifugal pumps
for the food industries

249253-EN-260218-TEMP

A **VERDER** COMPANY

www.packopumps.com

Food manufacturers should select pumps with these two concerns in mind:

The first is food safety.
The greatest fear of food manufacturers is a food safety issue that triggers a recall or plant shutdown. That's why food pumps should be designed with optimal cleanability in mind. In this brochure you will discover why Packo pumps stands out from the competition.

The second is greater efficiency.
Most food professionals rate greater efficiency as the second most important consideration to select a pump. Their concern is to avoid production disruptions and increase throughput.
Continue reading to find out how Packo pumps will help you achieve these and even more goals.

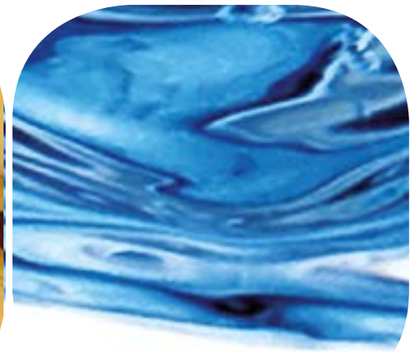

We optimize your flow

Product overview

	EHEDG	3A	1935/2004	FDA	ATEX	MEI	Hand polished welds	Electropolished	Pump casing
FP60	-	-	√	√	O	√	√	√	Pressed
FP1	-	-	√	√	O	√	√	√	Pressed
FP2	-	-	√	√	O	√	√	√	Pressed
FP2+	-	√	√	√	O	√	√	√	Pressed
FP3	√	-	√	√	O	√	√	√	Pressed
MFP2	-	-	√	√	O	√	√	√	Investment Cast
MFP3	-	-	√	√	O	√	√	√	Investment Cast
FPP2	-	-	√	√	O	-	√	√	Machined
FMS	-	-	√	√	O	-	√	√	Pressed or Investment cast
CRP	√	-	√	√	O	-	√	√	Pressed
CRP+	√	√	√	√	O	-	√	√	Pressed
SFP2	-	-	√	√	O	-	√	√	Pressed
SFP3	-	-	√	√	O	-	√	√	Pressed
RMO	√	-	√	√	-	√	√	√	Pressed or Investment cast
VPCP	-	-	√	√	-	-	-	√	Welded
IMO	-	-	√	√	-	-	-	√	Pressed or Investment cast

	Impeller	Quench seal	Double seal	Special feature	Page
FP60	Open	O	-	Hygienic low cost process pump	16
FP1	Open	-	-	Hygienic process pump with limited options	18
FP2	Open	O	O	Hygienic process pump	20
FP2+	Open	O	O	3A certified hygienic process pump	22
FP3	Closed	O	O	EHEDG certified	24
MFP2	Open or Semi-open	O	O	Extreme energy saving thanks to optimum pump hydraulics	26
MFP3	Closed	O	O	Flow up to 1200 m³/h	28
FPP2	Open	O	O	Max inlet pressure: 40 bar	30
FMS	Open	O	O	Multistage pump	32
CRP	Open or Closed	O	O	Air handling centrifugal (CIP return)	34
CRP+	Open	O	O	Air handling centrifugal (CIP return)	36
SFP2	Open	O	O	High shear pump	38
SFP3	Closed	O	O	High shear pump	38
RMO	Open or Closed	-	-	Milk collecting pump for lorries & trucks	40
VPCP	Vane	-	-	Large free passage, damage free pumping	42
IMO	Open, Closed or Vortex	-	-	Cantilever pump up to max 200°C for hot frying oil	44

Legend

√ = approved/standard
O = optional

Our expertise in your market

Dairy and general food industry

Packo Pumps has unrivalled experience in this sector. E.g. we have developed the first pumps for the dairy industry and have continuously improved them with our customers. Although the industry puts high demands on the cleanability of the pumps, the standards are far exceeded by Packo Pumps. The basis for this is a well-considered design and the standard application of electropolishing as a final surface treatment. A number of EHEDG and 3A certified pumps were developed specifically for this sector.

Typical applications:
Milk, whey, curd, brine, yeast, blood, CIP, etc.

Brewery and beverages

Perfect cleanability, high reliability, minimal product damage, low noise and extremely high pump efficiencies resulting in lower energy bills, are some of the most important properties for this field of application.
With a flow rate up to 1200 m³/h Packo Pumps offers just about the widest range of food grade pumps for this market segment. Packo Pumps is heading to become the norm in this market. The fact that the Packo pump for beer and wine filtration became a standard, is the strongest evidence for this.

Typical applications:
Wine, beer and fruit juice filtration, gentle pumping of mash as well as handling trub, water, sugar solutions, syrups, extracts, CIP, etc.

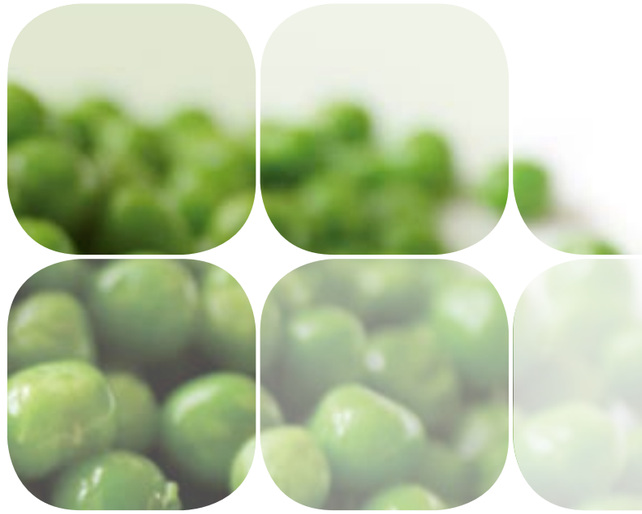

Vegetables & potatoes

A significant part of our core business is realised in this sector. Based on our experience, we may call ourselves specialists in this market segment.
Whether it is about damage free pumping of potatoes or any kind of vegetable, in all these cases Packo Pumps provides you with a reliable solution.
A well thought out design ensures smooth and damage free pumping without losing track of the hygienic aspect, durability or reliability.

Typical applications:
Transfer and blanching of potatoes and vegetables.

Meat, fish & frying oil

Some of the toughest applications take place in this sector. The production process - from transferring seafood, preparing and injecting brine or pumping frying oil at 200°C- is extremely demanding for the pumps.
There are many reasons to prefer Packo pumps for the job. One is their unrivalled durability and efficiency when it comes to working in harsh conditions.

Typical applications:
Transfer of fish and seafood, handling brine, batter and frying oil to 200 °C.

Perfectly cleanable construction. EHEDG and 3A certificate available for food pumps, pharmaceutical pumps and also for CIP return pumps.

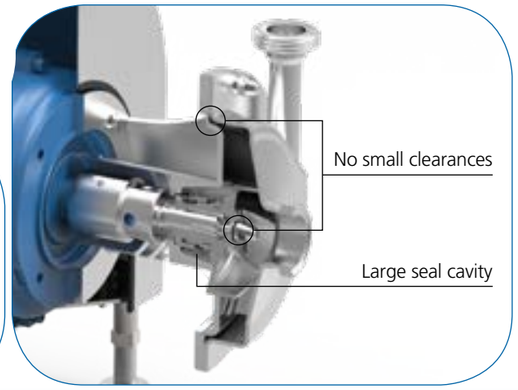

Hydraulic high quality product with the highest pump efficiencies and lowest NPSH values.

Lower energy bills thanks to Packo Pumps.

Easy, modular, maintenance friendly and robust concept.

Electropolished design

(for wetted & non-wetted parts)

Electropolished

All pumps are electro-polished. Compared to other techniques, this has the following advantages:
- easy to clean
- increased corrosion resistance
- no bacteria traps

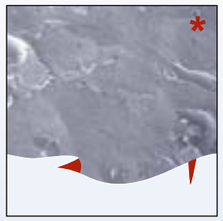

Glass bead blasted *

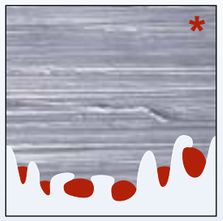

Mechanical polishing 240 grit *

* Higher risk of bacteria traps with other pump brand.

Designed for food

Packo pumps are designed to be outstanding in the food industry. With their unparallelled hygienic and robust design, they rank among the most efficient pumps in the food sector. Discover some of Packo pumps characteristics and find the perfect match for your food production process.

Standardized mechanical seals to EN12756. Limited number of dimensions for the full Packo pump range.

Sterile balanced seals (spring not in contact with liquid) available, also for higher inlet pressures.

According to applicable standards and legislations, particularly within Europe, but also outside.

Before shipping all pumps are subjected to a thorough automated testing procedure. Performance and hydrostatic pressure tests, as well as a vibration test and control of the main dimensions are part of the standard test procedure. 100% final inspection!

ISO 9001:2008
ISO 14001

BQA_QMS019_C_1994041

BQA_EMS019_C_2015041

Standardized motor dimensions to IEC. Available in accordance with local motor laws.

Dairy industry

Packo Pumps

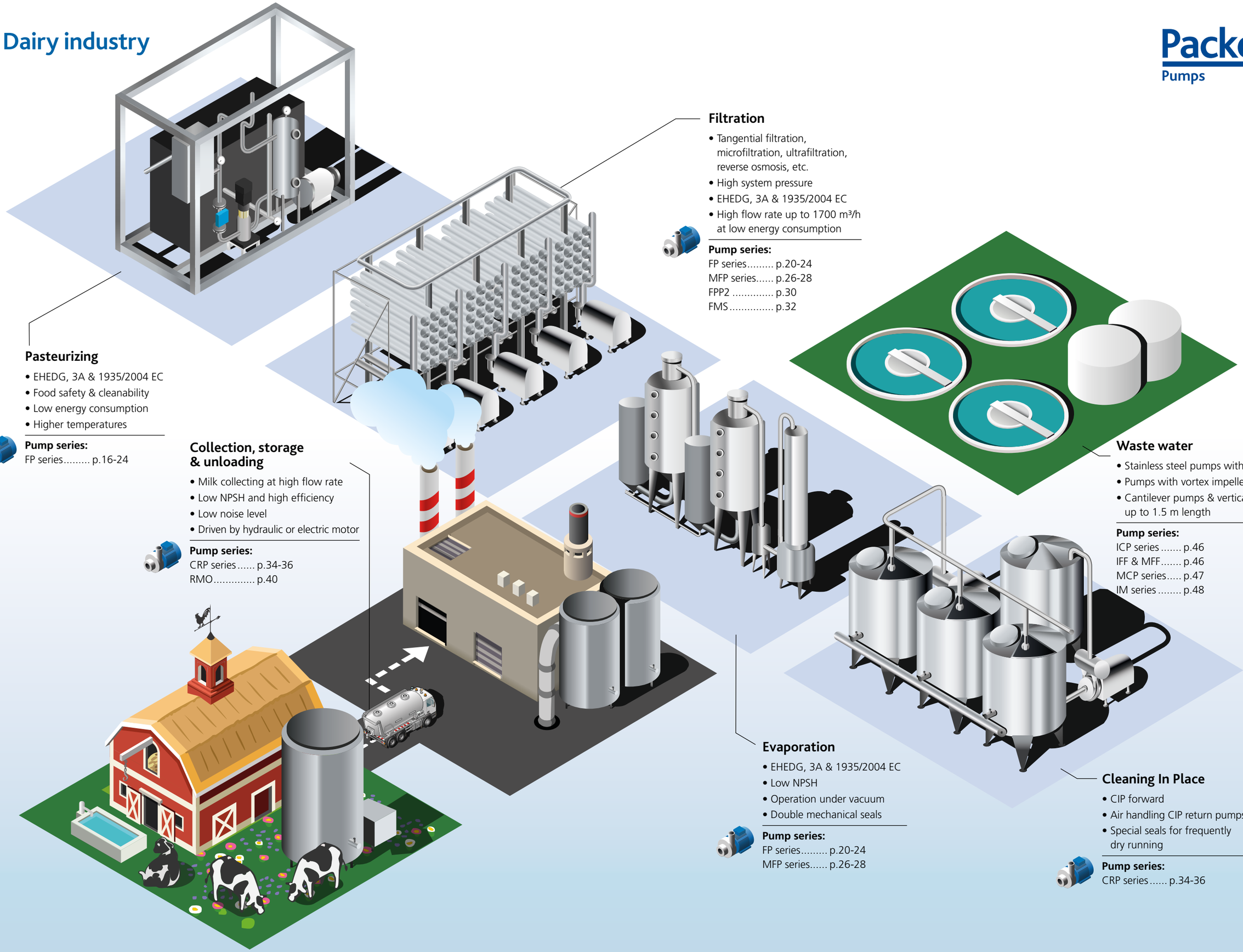

Pasteurizing

- EHEDG, 3A & 1935/2004 EC
- Food safety & cleanability
- Low energy consumption
- Higher temperatures

Pump series:
FP series..... p.16-24

Collection, storage & unloading

- Milk collecting at high flow rate
- Low NPSH and high efficiency
- Low noise level
- Driven by hydraulic or electric motor

Pump series:
CRP series..... p.34-36
RMO..... p.40

Filtration

- Tangential filtration, microfiltration, ultrafiltration, reverse osmosis, etc.
- High system pressure
- EHEDG, 3A & 1935/2004 EC
- High flow rate up to 1700 m³/h at low energy consumption

Pump series:
FP series..... p.20-24
MFP series..... p.26-28
FPP2 ..... p.30
FMS p.32

Evaporation

- EHEDG, 3A & 1935/2004 EC
- Low NPSH
- Operation under vacuum
- Double mechanical seals

Pump series:
FP series..... p.20-24
MFP series..... p.26-28

Waste water

- Stainless steel pumps with industrial finish
- Pumps with vortex impeller
- Cantilever pumps & vertical sump pumps up to 1.5 m length

Pump series:
ICP series p.46
IFF & MFF..... p.46
MCP series..... p.47
IM series p.48

Cleaning In Place

- CIP forward
- Air handling CIP return pumps
- Special seals for frequently dry running

Pump series:
CRP series..... p.34-36

Brewing industry

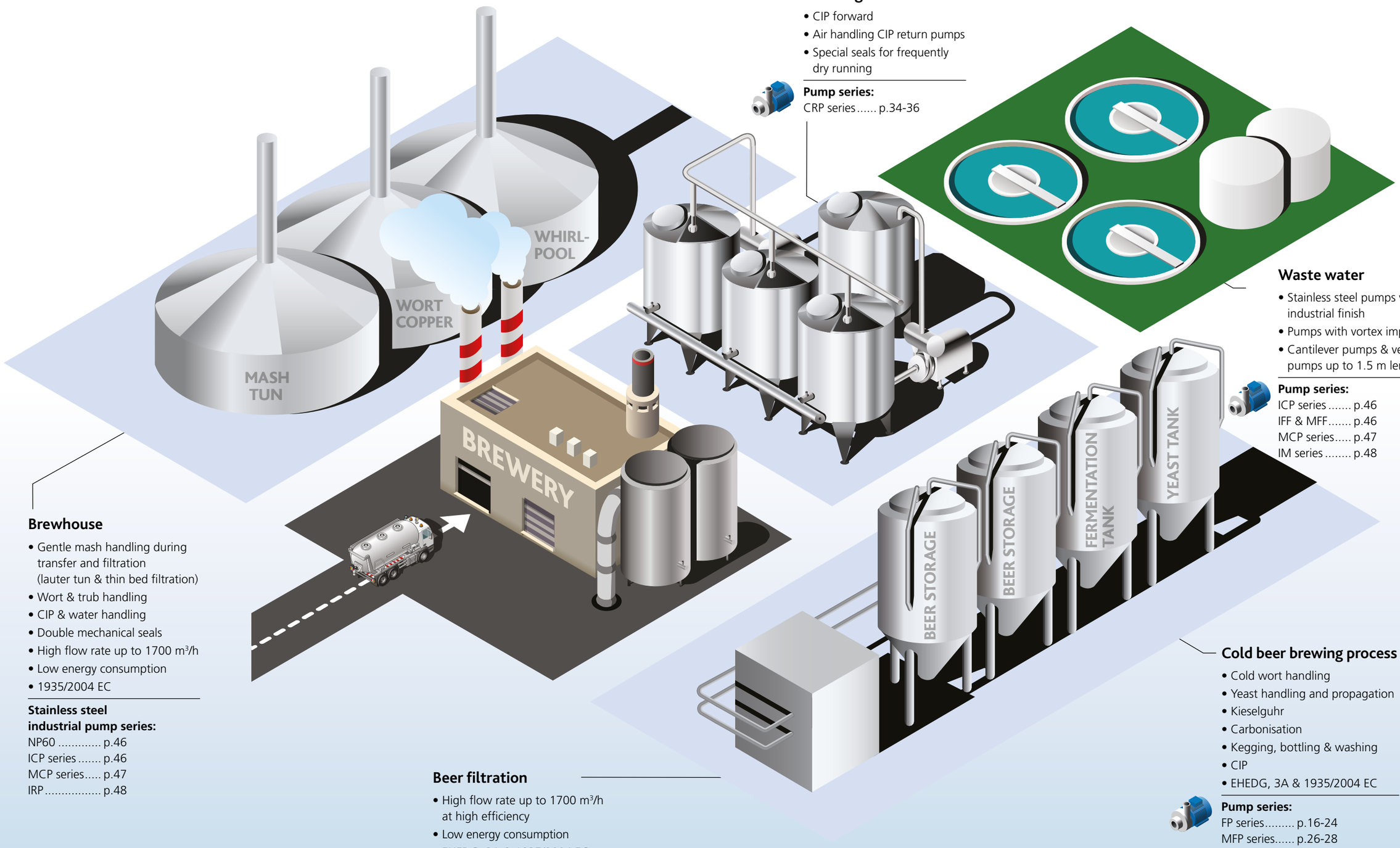

Cleaning In Place

- CIP forward
- Air handling CIP return pumps
- Special seals for frequently dry running

Pump series:
CRP series p.34-36

Waste water

- Stainless steel pumps with industrial finish
- Pumps with vortex impeller
- Cantilever pumps & vertical sump pumps up to 1.5 m length

Pump series:
ICP series p.46
IFF & MFF..... p.46
MCP series..... p.47
IM series p.48

Brewhouse

- Gentle mash handling during transfer and filtration (lauter tun & thin bed filtration)
- Wort & trub handling
- CIP & water handling
- Double mechanical seals
- High flow rate up to 1700 m³/h
- Low energy consumption
- 1935/2004 EC

Stainless steel industrial pump series:
NP60 ..... p.46
ICP series p.46
MCP series..... p.47
IRP..... p.48

Beer filtration

- High flow rate up to 1700 m³/h at high efficiency
- Low energy consumption
- EHEDG, 3A & 1935/2004 EC

Pump series:
FP series..... p.16-24
MFP series..... p.26-28

Cold beer brewing process

- Cold wort handling
- Yeast handling and propagation
- Kieselguhr
- Carbonisation
- Kegging, bottling & washing
- CIP
- EHEDG, 3A & 1935/2004 EC

Pump series:
FP series..... p.16-24
MFP series..... p.26-28
FMS..... p.32
CRP series..... p.34-36

Vegetable & potato industry

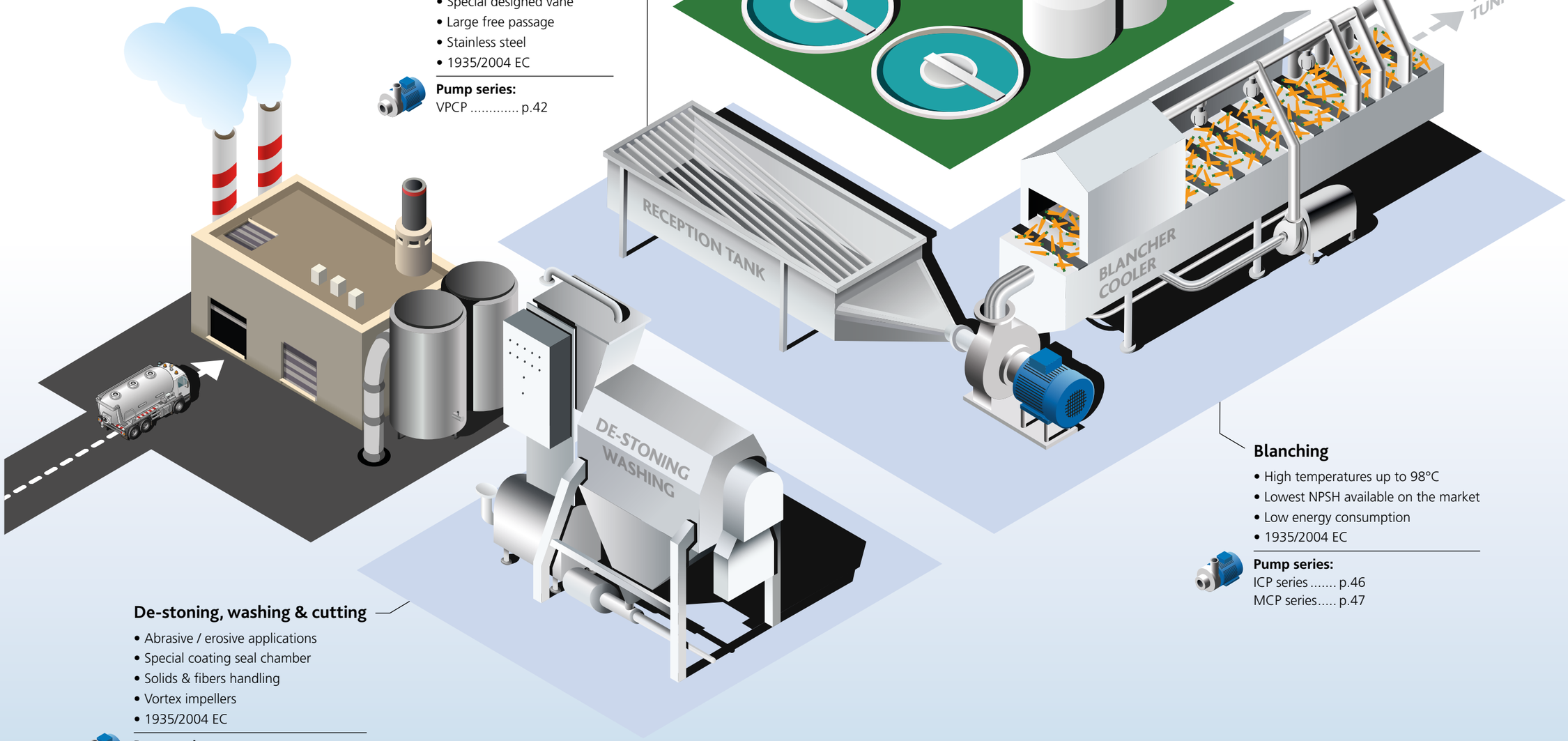

Waste water

- Stainless steel pumps with industrial finish
- Pumps with vortex impeller
- Cantilever pumps & vertical sump pumps up to 1.5 m length

Pump series:
ICP series p.46
IFF & MFF..... p.46
MCP series..... p.47
IM series p.48

Transport of vegetables

- Lowest product damage on the market
- Special designed vane
- Large free passage
- Stainless steel
- 1935/2004 EC

Pump series:
VPCP p.42

Blanching

- High temperatures up to 98°C
- Lowest NPSH available on the market
- Low energy consumption
- 1935/2004 EC

Pump series:
ICP series p.46
MCP series..... p.47

De-stoning, washing & cutting

- Abrasive / erosive applications
- Special coating seal chamber
- Solids & fibers handling
- Vortex impellers
- 1935/2004 EC

Pump series:
NP60 ..... p.46
ICP series p.46
IFF & MFF..... p.46
MCP series..... p.47
MWP series.... p.47

Other applications in the food industry

In addition to the industries presented in the previous pages Packo Pumps can offer a wide range of food grade pumps to almost every industry.
We have unlimited solutions regardless of the application. When it comes to cleanability, food safety, easy maintenance, energy consumption and reliability Packo Pumps is the ideal partner.

Hot frying oil

- Fries, chicken nuggets, etc.
- Leakage free solution
- Maintenance free solution up to 200°C

Pump series:
IMO p.44

Brine injector

- Food safety
- Product viscosity up to 1000 cP
- EHEDG, 3A & 1935/2004 EC

Pump series:
FP series..... p.18-24
MFP series..... p.26-28

Batter & emulsions

- Water, salt, proteins, sugar, gelatine, etc,…
- Product viscosity up to 1000 cP
- EHEDG, 3A & 1935/2004 EC

Pump series:
FP series..... p.16-20

Animal blood handling

- EHEDG, 3A & 1935/2004 EC
- Product viscosity up to 1000 cP
- Hemoglobine, plasma & concentrate

Pump series:
FP series..... p.16-24

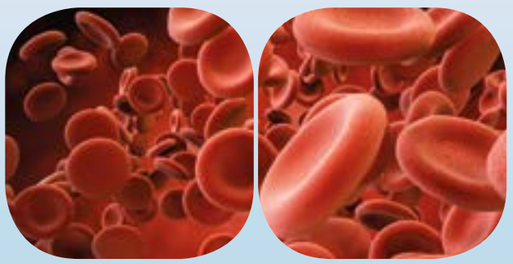

Fish & shellfish

- Damage free pumping
- Blanching & cooling
- 1935/2004 EC

Pump series:
VPCP p.42
ICP series p.46
IFF & MFF..... p.46
MCP series..... p.47

Egg white/egg yolk

- Food safety, EHEDG, 3A & 1935/2004 EC
- CIP & CIP return

Pump series:
FP series..... p.16-24
CRP series p.34-36

Soy milk/soy drinks

- Food safety, EHEDG, 3A & 1935/2004 EC
- CIP & CIP return

Pump series:
FP series..... p.16-24
CRP series p.34-36

Beverages

- Food safety
- CIP & CIP return
- Filtration, mixing, carbonisation, etc.

Pump series:
FP series..... p.16-24
MFP series..... p.26-28
CRP series p.34-36
SFP series p.38

Glycol

- For cooling applications
- Special solutions down to minus 40°C

Pump series:
ICP series p.46
MCP series..... p.47

Pump series FP60

Characteristics

These low cost pumps have stainless steel 316L pump casings constructed in cold rolled plate, 100% non-porous and extremely smooth. The pumps have open investment cast impellers in 316L. Thanks to its crevice-free design and electropolishing as a final surface treatment, the FP60 pump series are a reliable component for your food production process.

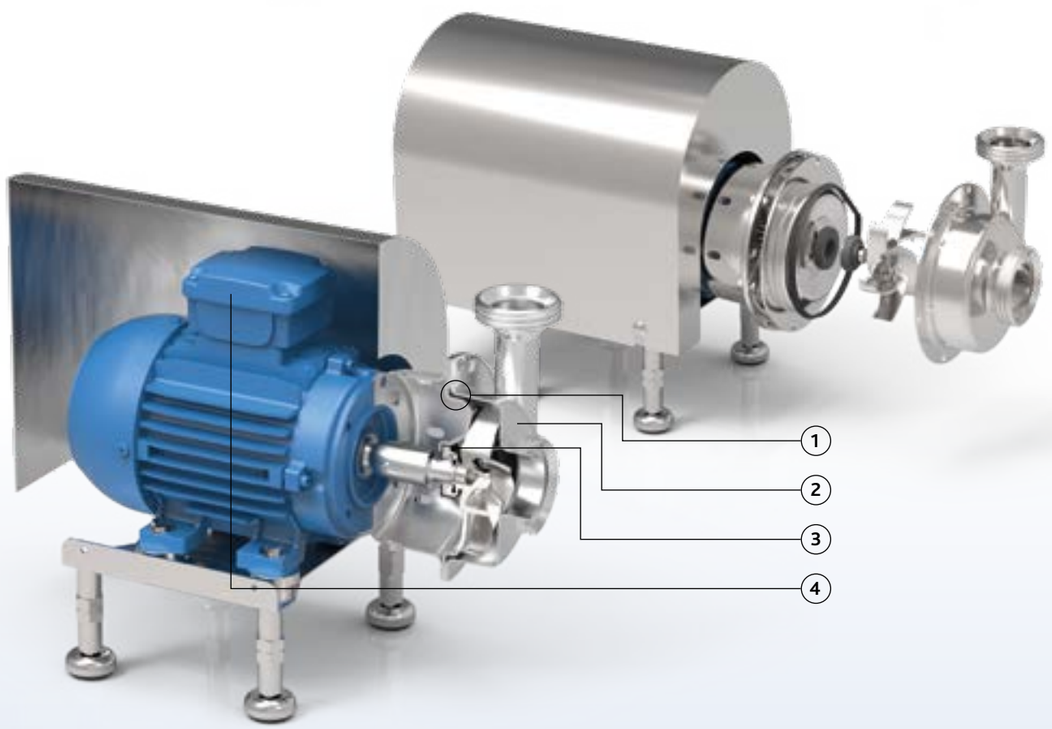

FP60

1 Electropolished, easy to clean construction, no bacteria traps and no small clearances in order to clean the area around the O-ring

2 Pressed stainless steel in 2B quality plate, extremely smooth

3 Large seal cavity to clean mechanical seal properly

4 Monobloc execution with std. IEC motors

5 FDA approved mechanical seals

6 One seal diameter for the entire range: Ø 18

mechanical seal

Packo Pumps

Your benefits

- High pump efficiency resulting in lower energy consumption
- Low NPSH values: less risk on cavitation
- Electropolished: easy to clean
- Easy construction and easy maintenance: less downtime
- Easy to install
- Best value for money

Application areas

The FP60 food pump series are mainly used for pumping clean and slightly contaminated liquids coming from dairies, cheese factories, breweries, distilleries, beverage industry, etc.

They are often used as process pump for heat exchangers, filtration units, filling machines, brine injectors, batter machines and CIP cleaning systems.

Typical liquids are milk, whey, curd, batter, brine, beer, CIP, alcohol, etc.

Pump series	FP60
Performance	
max. flow rate	40 m³/h
max. differential head	27 m
max. inlet pressure	3 bar
max. liquid viscosity	500 cP
max. temperature	95°C
impeller type	open
max. free passage	15 mm
max. motor power	2.2 kW
max. speed	3000/3600 rpm
available frequency	50/60 Hz
Technical specifications	
materials wetted parts	stainless steel 316L or similar
mechanical seal configuration	single, quench
available material o-ring	EPDM, FKM
connections	hygienic fittings
surface finish	hygienic quality, internal welds hand polished + electropolished (casing 0.8 µm - impeller 3.2 µm)
certificates & legislation	

Performance curves at 2900 rpm

FP60

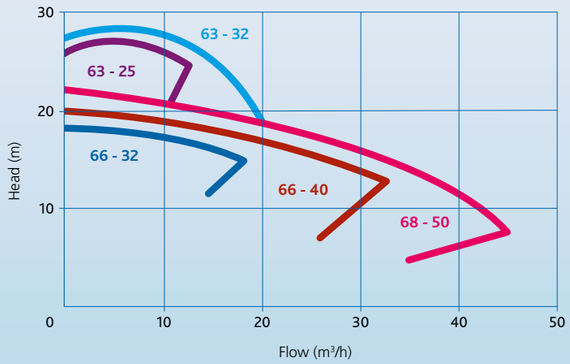

Pump series FP1

Characteristics

The Packo stainless steel centrifugal pumps of the FP1 series are the best “value for money” food grade pumps, mainly used for pumping clean and slightly contaminated liquids. This series achieves an overall high efficiency, leading to a lower energy consumption for your production process. Thanks to its modular concept it also guarantees an easy maintenance.

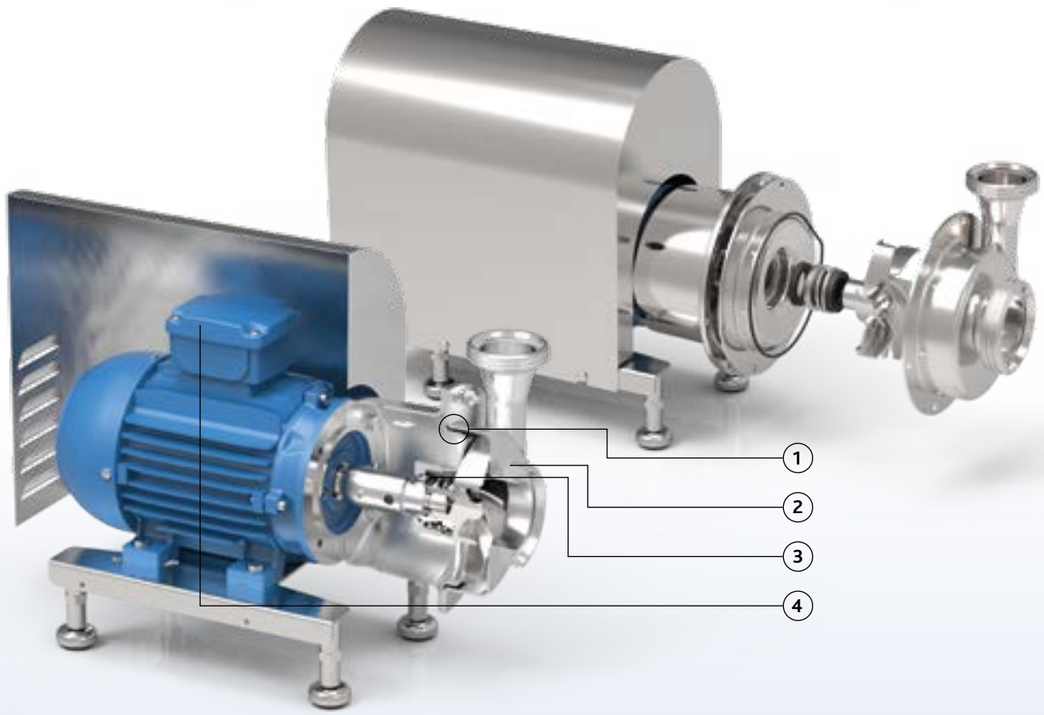

FP1

1 Electropolished, easy to clean construction, no bacteria traps and no small clearances in order to clean the area around the O-ring

2 Pressed stainless steel in 2B quality plate, extremely smooth

3 Large seal cavity to clean mechanical seal properly

4 Monobloc execution with std. IEC motors

5 Standardized mechanical seals to EN 12756 FDA approved bellow mechanical seals or sterile O-ring seals (spring not in contact with the liquid)

6 One seal diameter for the entire range: Ø 33

5 6

bellow seal

sterile seal

Packo Pumps

Your benefits

- High pump efficiency resulting in lower energy consumption
- Low NPSH values: less risk on cavitation
- Electropolished: easy to clean
- Easy construction and easy maintenance: less downtime
- Easy to install
- Best value for money

Application areas

FP1 pumps are mainly used for pumping clean and light contaminated products from dairies, cheese dairies, breweries, distilleries, beverage industry, etc.

They are often used as process pumps for heat exchangers, filtration units, filling machines, brine injectors, batter machines and CIP cleaning systems.

Typical fluids are milk, whey, curd, batter, brine, beer, CIP, alcohol, etc.

Pump series	FP1
Performance	
max. flow rate	55 m³/h
max. differential head	40 m
max. inlet pressure	6 bar
max. liquid viscosity	1000 cP
max. temperature	140°C
impeller type	open
max. free passage	18 mm
max. motor power	5.5 kW
max. speed	3000/3600 rpm
available frequency	50/60 Hz
Technical specifications	
materials wetted parts	stainless steel 316L or similar
mechanical seal configuration	single
available material o-ring	EPDM, FKM, FEP, FFKM
connections	hygienic fittings
surface finish	hygienic quality, internal welds hand polished + electropolished (casing 0.8 µm - impeller 3.2 µm)
certificates & legislation	

Performance curves at 2900 rpm

FP1

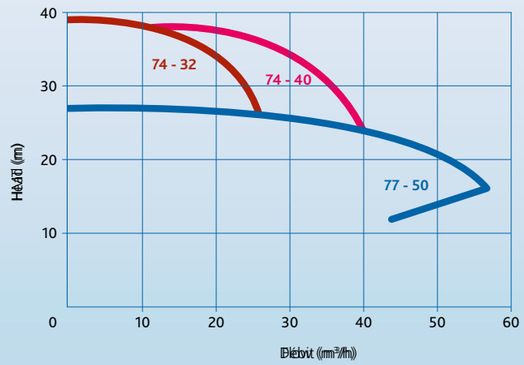

Pump series FP2

Characteristics

These pumps have stainless steel 316L pump casings constructed in thick cold rolled plate, 100% non-porous and extremely smooth. The pumps have open investment cast impellers, constructed in 316L or duplex materials. Thanks to its crevice-free design and electropolishing as a final surface treatment, the FP2 pump series are perfectly cleanable, resulting in a reliable component for your food production process.

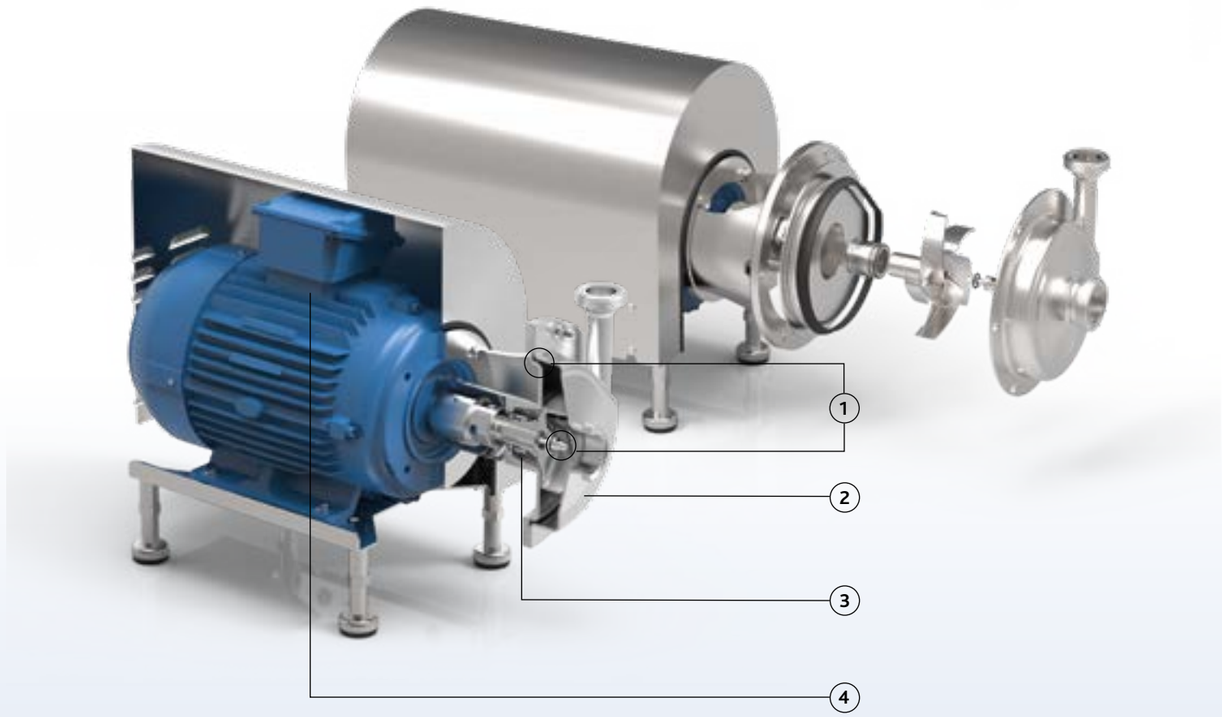

FP2

1 Electropolished, easy to clean construction, no bacteria traps and no small clearances in order to clean the area around the O-ring

2 Pressed stainless steel in 2B quality plate, extremely smooth

3 Large seal cavity to clean mechanical seal properly

4 Monobloc execution with std. IEC motors

5 Standardized mechanical seals to EN 12756
FDA approved bellow mechanical seals or sterile O-ring seals (spring not in contact with the liquid)

6 One seal diameter: Ø 33 mm, except for 250 types: Ø 43 mm

5 6

bellow seal

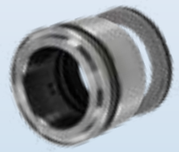

sterile seal

Your benefits

- High pump efficiency resulting in lower energy consumption
- Low NPSH values: less risk on cavitation
- Electropolished: perfectly cleanable
- Easy construction and easy maintenance: less downtime
- Standard components
- Easy to install
- 2 mechanical seal diameters for entire range
- Robust construction

Application areas

The Packo process pumps of the FP2 series are used in the most demanding hygienic applications in almost all industries such as dairies, breweries, beverage industry, distilleries, etc.

They are the ideal solution for filtration applications, pasteurisation, evaporating systems, yeast propagation and for CIP cleaning systems as well.

Typical applications include filtration of beer, wine and fruit juices as well as pumping yeast, whey and curd.

Pump series	FP2
Performance	
max. flow rate	110 m^3/h
max. differential head	110 m
max. inlet pressure	13 bar
max. liquid viscosity	1000 cP
max. temperature	140°C
impeller type	open
max. free passage	22 mm
max. motor power	45 kW
max. speed	3000/3600 rpm
available frequency	50/60 Hz
Technical specifications	
materials wetted parts	stainless steel 316L or similar
mechanical seal configuration	single bellow, sterile, quench, double
available material o-ring	EPDM, FKM, FEP-FKM, FFKM, Silicone
connections	hygienic fittings
surface finish	hygienic quality, internal welds hand polished + electropolished (casing 0.8 µm - impeller 3.2 µm)
certificates & legislation	

Performance curves at 2900 rpm

FP2

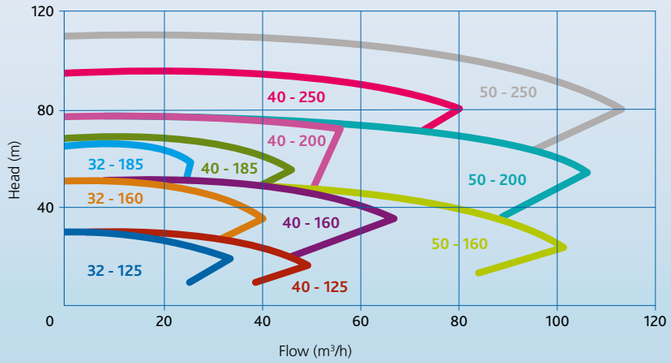

Pump series FP2+

Characteristics

These 3A certified pumps have stainless steel 316L pump casings constructed in thick cold rolled plate, 100% non-porous and extremely smooth. The pumps have open investment cast impellers, constructed in 316L or duplex materials. Thanks to its crevice-free design and electropolishing as a final surface treatment, the FP2+ pump series are perfectly cleanable, resulting in a reliable component for your production process.

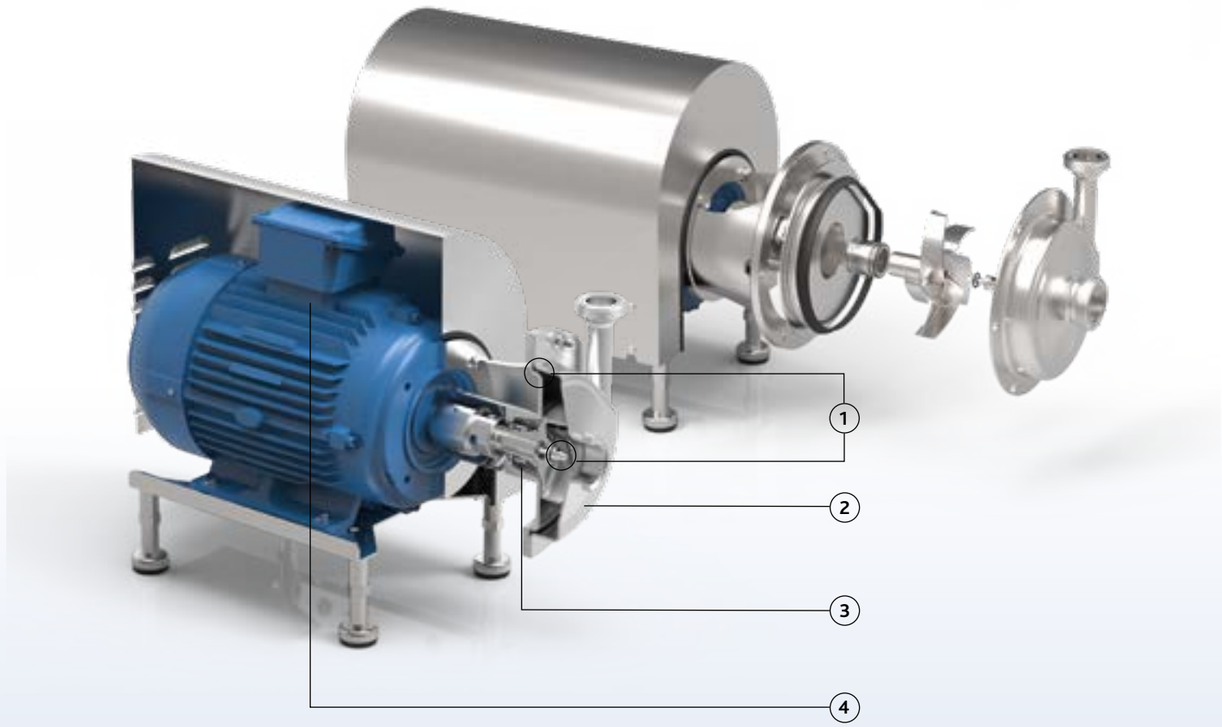

FP2+

1 Electropolished, easy to clean construction, no bacteria traps and no small clearances in order to clean the area around the O-ring

2 Pressed stainless steel in 2B quality plate, extremely smooth

3 Large seal cavity to clean mechanical seal properly

4 Monobloc execution with std. IEC motors

5 Standardized mechanical seals to EN 12756 FDA approved sterile O-ring seals (spring not in contact with the liquid)

6 One seal diameter: Ø 33 mm, except for 250 types: Ø 43 mm

5 6

sterile seal

Packo Pumps

Your benefits

- High pump efficiency resulting in lower energy consumption
- Low NPSH values: less risk on cavitation
- Electropolished: perfectly cleanable
- Easy construction and easy maintenance: less downtime
- Standard components
- Easy to install
- 2 mechanical seal diameters for entire range
- Robust construction

Application areas

The Packo 3A certified process pumps of the FP2+ series are used in the most demanding hygienic applications in almost all industries such as dairies, breweries, beverage industry, distilleries, etc.

They are the ideal solution for filtration applications, pasteurisation, evaporating systems, yeast propagation and for CIP cleaning systems as well.

In pharmaceutical and biotech industry they are mainly used for handling Purified Water and as CIP forward pump in cleaning systems.

Pump series	FP2+
Performance	
max. flow rate	110 m³/h
max. differential head	110 m
max. inlet pressure	13 bar
max. liquid viscosity	1000 cP
max. temperature	140°C
impeller type	open
max. free passage	22 mm
max. motor power	45 kW
max. speed	3000/3600 rpm
available frequency	50/60 Hz
Technical specifications	
materials wetted parts	stainless steel 316L or similar
mechanical seal configuration	single sterile, quench, double
available material o-ring	EPDM, FKM, FEP-FKM, FFKM, Silicone
connections	3A approved hygienic fittings only
surface finish	hygienic quality, internal welds hand polished + electropolished (wetted parts 0.8 µm)
certificates & legislation	

Performance curves at 2900 rpm

FP2+

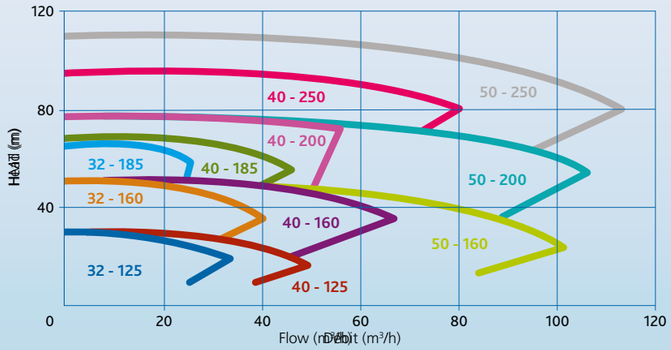

Pump series FP3

Characteristics

The pumps have closed impellers with 3-dimensionally profiled blades and large passage and they are constructed in 316L or duplex materials. Thanks to its crevice-free design and electropolishing as a final surface treatment, the FP3 pump series are perfectly cleanable, resulting in a reliable component for your production process. These perfectly cleanable pumps have stainless steel 316L pump casings constructed in thick cold rolled plate, 100% non-porous and extremely smooth.

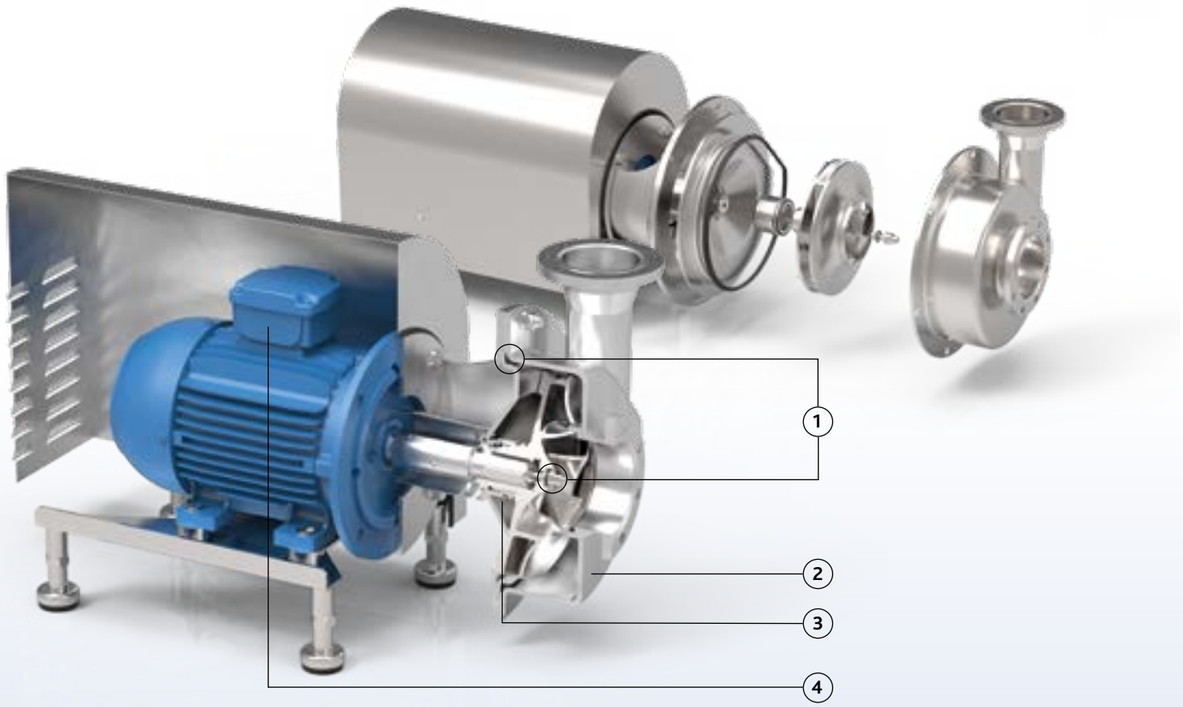

FP3

1. Electropolished, easy to clean construction, no bacteria traps and no small clearances in order to clean the area around the O-ring
2. Pressed stainless steel in 2B quality plate, extremely smooth
3. Large seal cavity to clean mechanical seal properly
4. Monobloc execution with std. IEC motors
5. Standardized mechanical seals to EN 12756 FDA approved bellow mechanical seals or sterile O-ring seals (spring not in contact with the liquid)
6. Two seal diameters:
   - motor power ≤ 45 kW: Ø 43 mm
   - motor power > 45 kW: Ø 70 mm

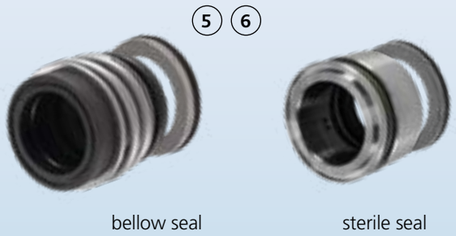

bellow seal

sterile seal

Packo Pumps

Your benefits

- High pump efficiency resulting in lower energy consumption
- Low NPSH values: less risk on cavitation
- Electropolished: perfectly cleanable
- Easy construction and easy maintenance: less downtime
- Easy to install
- 2 mechanical seal diameters for the entire range
- Robust construction

Application areas

These perfectly cleanable process pumps are the ideal solution for filtration applications, pasteurisation, evaporating systems, yeast propagation and for CIP cleaning systems as well.

Typical applications include filtration of beer, wine and fruit juices as well as pumping yeast, whey and curd.

Pump series	FP3
Performance	
max. flow rate	320 m^3/h
max. differential head	120 m
max. discharge pressure	15 bar
max. liquid viscosity	500 cP
max. temperature	140°C
impeller type	closed with back vanes and balancing holes
max. free passage	21 mm
max. motor power	90 kW
max. speed	3000/3600 rpm
available frequency	50/60 Hz
Technical specifications	
materials wetted parts	stainless steel 316L or similar
mechanical seal configuration	single, quench, double
available material o-ring	EFDM, FKM, FEP-FKM, FFKM, Silicone
connections	hygienic fittings
surface finish	hygienic quality, internal welds hand polished + electropolished (casing 0.8 µm - impeller 3.2 µm)
certificates & legislation	

Performance curves at 2900 rpm

FP3

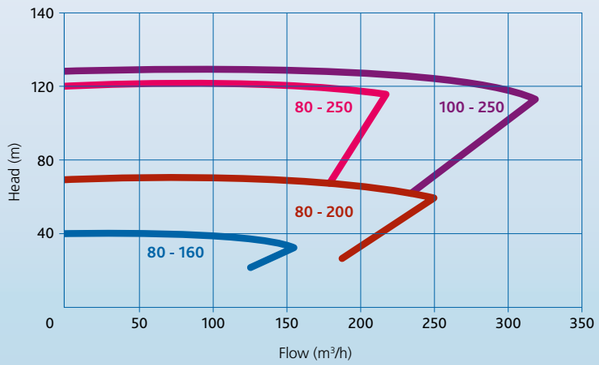

Pump series MFP2

Characteristics

The Packo pumps of the MFP2 series are used on the most demanding hygienic applications in almost all industries such as dairies, breweries, beverage industry, distilleries, etc. These robust pumps have stainless steel 316L cast pump casings and open or semi-open investment cast impellers, constructed in 316L or duplex materials.
Thanks to its crevice-free design and electropolishing as a final surface treatment, the MFP2 pump series are the ideal reliable component for your production process.

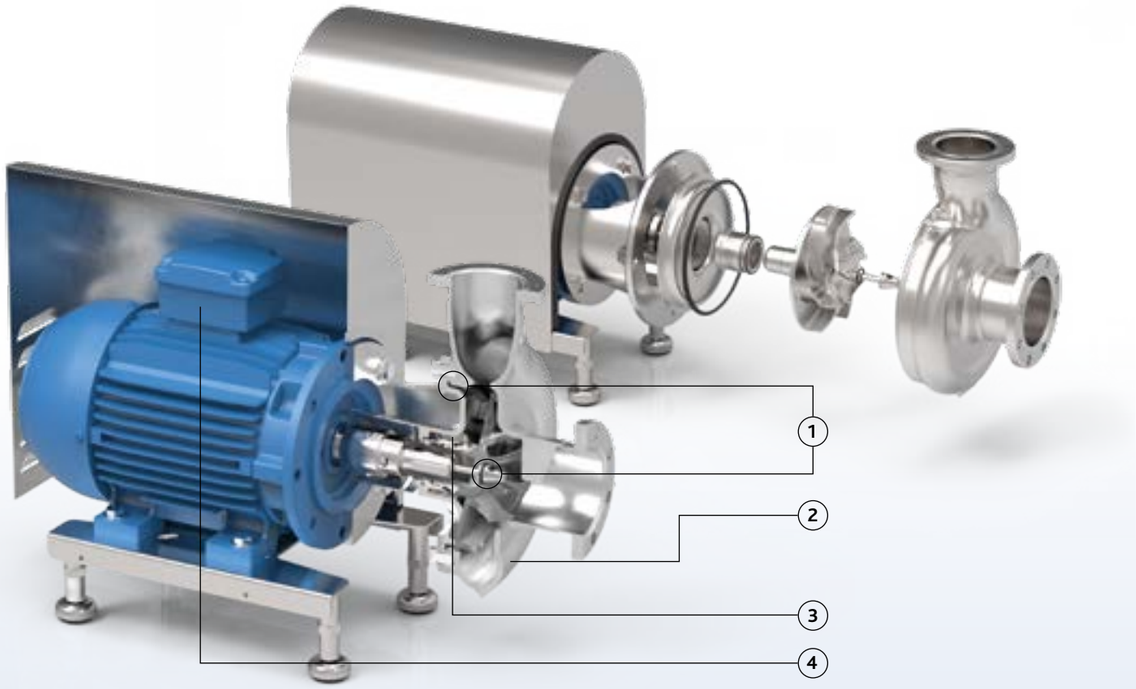

MFP2

1 Electropolished, easy to clean construction, no bacteria traps and no small clearances in order to clean the area around the O-ring

2 Solid design thanks to investment cast casings and impellers

3 Large seal cavity to clean mechanical seal properly

4 Monobloc execution with std. IEC motors

5 Standardized mechanical seals to EN 12756
FDA approved bellow mechanical seals or sterile O-ring seals (spring not in contact with the liquid)

6 One seal diameter for the entire range: Ø 33 mm

5 6

bellow seal

sterile seal

Packo Pumps

Your benefits

- High pump efficiency resulting in lower energy consumption
- Low NPSH values: less risk on cavitation
- Electropolished: easy to clean
- Easy construction and easy maintenance: less downtime
- Standard components
- Easy to install
- Robust construction

Application areas

These robust process pumps are the ideal reliable component for filtration applications, pasteurization, yeast propagation as well as for CIP cleaning systems.

Typical applications include filtration of beer, wine and fruit juices as well as pumping yeast, whey, curd, CIP, etc.

Pump series	MFP2
Performance	
max. flow rate	120 m^3/h
max. differential head	65 m
max. inlet pressure	10 bar
max. liquid viscosity	1000 cP
max. temperature	140°C
impeller type	open and semi-open
max. free passage	25 mm
max. motor power	22 kW
max. speed	3000/3600
available frequency	50/60 Hz
Technical specifications	
materials wetted parts	stainless steel 316L or similar
mechanical seal configuration	single, quench, double
available material o-ring	EPDM, FKM, FEP-FKM, FFKM, Silicone
connections	hygienic fittings
surface finish	hygienic quality, internal welds hand polished + electropolished
certificates & legislation	

Performance curves

MFP2

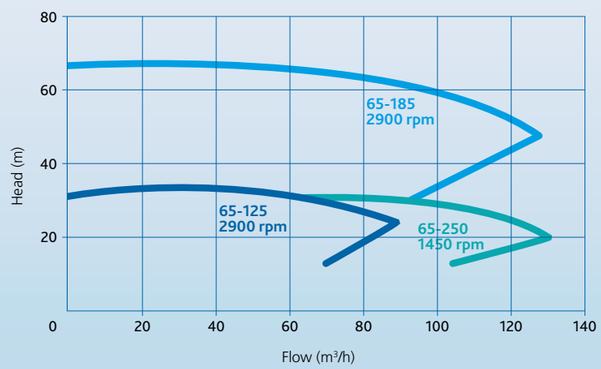

Pump series MFP3

Characteristics

The Packo pumps of the MFP3 series are used on the most demanding hygienic applications in almost all industries such as dairies, breweries, beverage industry, distilleries, etc. These robust pumps have stainless steel 316L cast pump casings and closed investment cast impellers, constructed in 316L or duplex materials.
Thanks to its crevice-free design and electropolishing as a final surface treatment, the MFP3 pump series are the ideal reliable component for your production process.

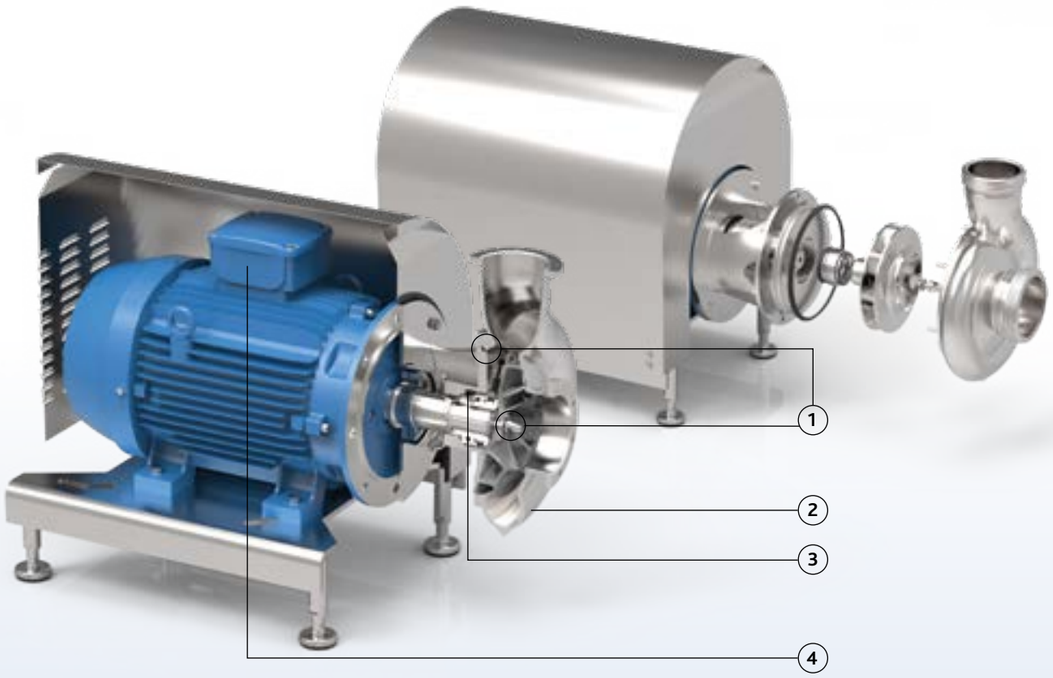

MFP3

1 Electropolished, easy to clean construction, no bacteria traps and no small clearances in order to clean the area around the O-ring
2 Solid design thanks to investment cast casings and impellers
3 Large seal cavity to clean mechanical seal properly
4 Monobloc execution with std. IEC motors
5 Standardized mechanical seals to EN 12756 FDA approved bellow mechanical seals or sterile O-ring seals (spring not in contact with the liquid)
6 Mechanical seal diameters depending on motor power: 43 - 70 - 110 mm

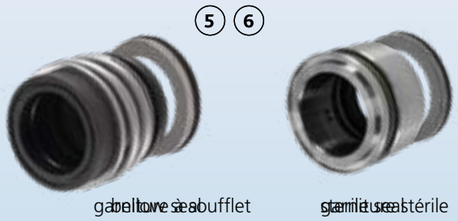

gabelloweseal bellow seal
garniture sterile sterile seal

Your benefits

- High pump efficiency resulting in lower energy consumption
- Low NPSH values: less risk on cavitation
- Electropolished: easy to clean
- Easy construction and easy maintenance: less downtime
- Standard components
- Easy to install
- Robust construction

Application areas

These robust process pumps are the ideal reliable component for filtration applications, pasteurization, yeast propagation as well as for CIP cleaning systems.

Typical applications include filtration of beer, wine and fruit juices as well as pumping yeast, whey, curd, CIP, etc.

Pump series	MFP3
Performance	
max. flow rate	1200 m³/h *
max. differential head	70 m
max. discharge pressure	12 bar
max. liquid viscosity	500 cP
max. temperature	140°C
impeller type	closed with back vanes and balancing holes
max. free passage	27 mm
max. motor power	250 kW
max. speed	3000/3600
available frequency	50/60 Hz
Technical specifications	
materials wetted parts	stainless steel 316L or similar
mechanical seal configuration	single, quench, double
available material o-ring	EPDM, FKM, FEP-FKM, FFKM, Silicone
connections	hygienic fittings
surface finish	hygienic quality, internal welds hand polished + electropolished
certificates & legislation	FDA USP MEI EAC

* Higher capacities up to 1700 m³/h available in industrial range (industrial fittings and welds not hand-polished).

Performance curves

MFP3

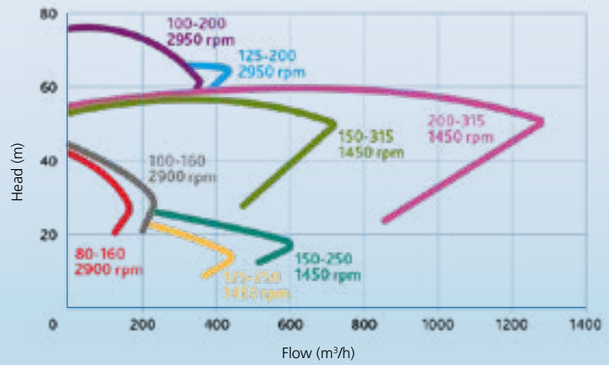

Pump series FPP2

Characteristics

The food grade Packo stainless steel pumps of the FPP2 series are pumps made of solid, machined stainless steel 316L and are extremely suitable for high system pressure applications up to 40 bar. Typical applications can be found in reverse osmosis applications in all kind of food related applications such as whey filtration, CIP waste filtration, beer filtration, etc.

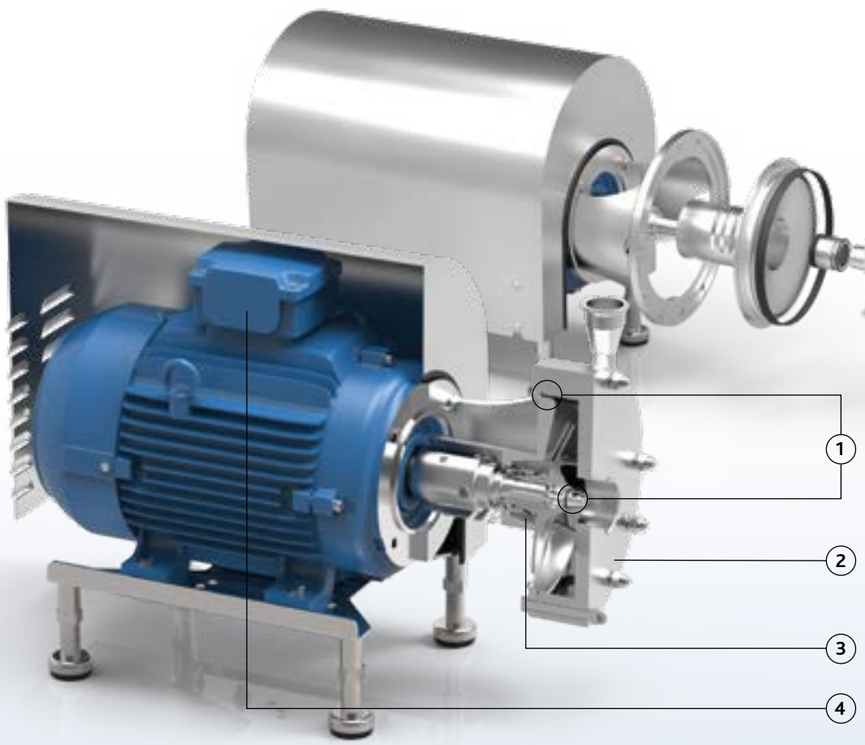

FPP2

1 Electropolished, easy to clean construction, no bacteria traps and no small clearances in order to clean the area around the O-ring

2 Fully machined stainless steel, extremely smooth

3 Large seal cavity to clean mechanical seal properly

4 Monobloc execution with std. IEC motors

5 Standardized mechanical seals to EN 12756 FDA approved sterile O-ring seals (spring not in contact with the liquid)

6 One seal diameter Ø 33 mm

5 6

sterile seal

Packo Pumps

Your benefits

- Suitable for system pressure applications up to 40 bar
- High pump efficiency resulting in lower energy consumption
- Low NPSH values: less risk on cavitation
- Electropolished: easy to clean
- Easy construction and easy maintenance: less downtime
- Standard components
- Easy to install
- 1 seal diameter for entire range

Application areas

The Packo high pressure pumps of the FPP2 series are used primarily in the reverse osmosis (RO) applications for the filtration of, for example, contaminated CIP-water, whey, etc. They are also used as a booster pump in a variety of skids.

You will find them in just about all industries including the dairy industry, breweries, beverage industry as well as in water treatment industry.

Pump series	FPP2
Performance	
max. flow rate	70 m³/h
max. differential head	70 m
max. inlet pressure	max. 40 bar
max. liquid viscosity	500 cP
max. temperature	140°C
impeller type	open
max. free passage	15 mm
max. motor power	22 kW
max. speed	3000/3600 rpm
available frequency	50/60 Hz
Technical specifications	
materials wetted parts	stainless steel 316L or similar
mechanical seal configuration	single, quench, double
available material o-ring	EPDM, FKM, FEP-FKM, FFKM, Silicone
connections	Tri-Clamp connections
surface finish	hygienic quality, internal welds hand polished + electropolished
certificates & legislation	

Performance curves at 2900 rpm

FPP2

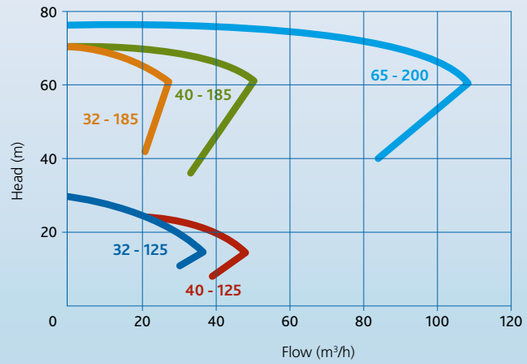

Pump series FMS

Characteristics

The hygienically designed Packo multistage pumps from the FMS series are used as process pump in the most diverse applications in food, pharmaceutical and chemical industries. They are the right match for operations at moderate flows and high pressures.

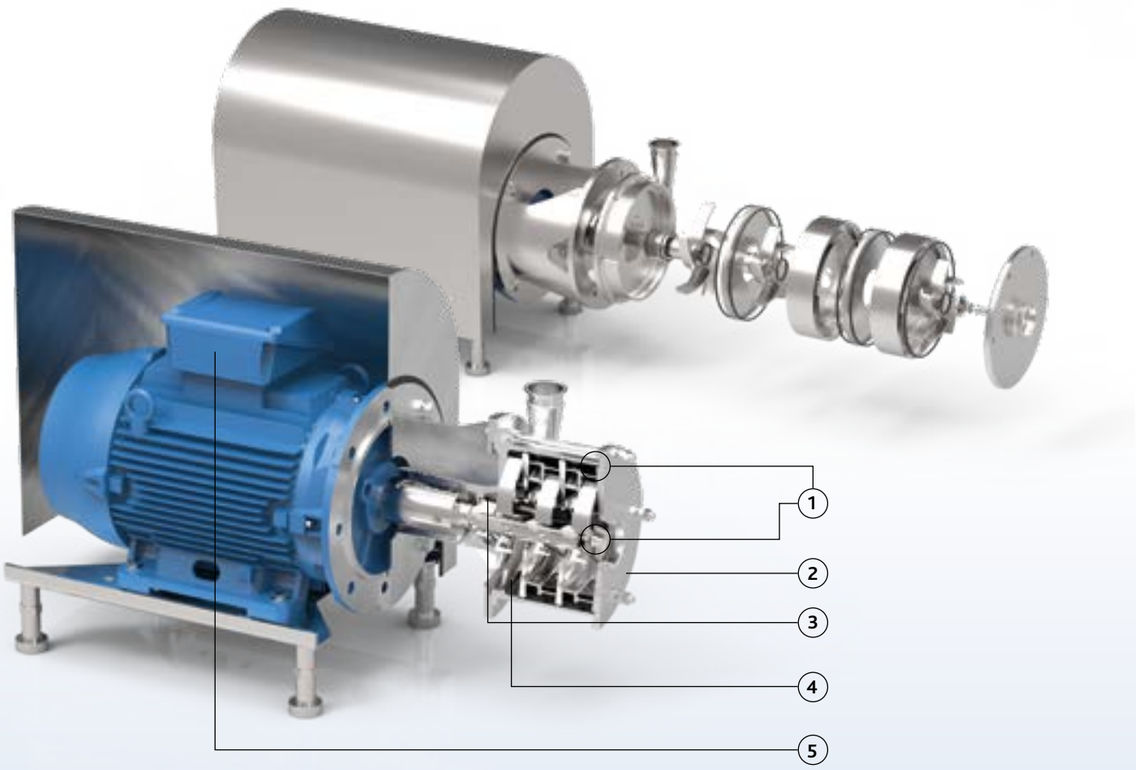

FMS

1 Electropolished, easy to clean construction, no bacteria traps and no small clearances in order to clean the area around the O-ring

2 Investment cast design

3 Large seal cavity to clean mechanical seal properly

4 Open impellers: no axial forces on motor bearings

5 Monobloc execution with std. IEC motors

6 Standardized mechanical seals to EN 12756 FDA approved bellow mechanical seals or sterile O-ring seals (spring not in contact with the liquid)

6

bellow seal

sterile seal

Packo Pumps

Your benefits

- Ideal for operation at moderate flow rate and high pressures
- High pump efficiency resulting in lower energy consumption
- Low NPSH values: less risk on cavitation
- Electropolished: easy to clean
- Easy construction and easy maintenance: less downtime
- Standard components
- Easy to install

Application areas

For use in food, brew, beverage, pharmaceutical and chemical industries, as transfer and mixing pump for liquid food products, drinks, medicines, lotions, etc.

Typical applications: process pump for plate heat exchangers, pasteurizer systems, filters, filling machines, mixers, deaerators, carbonators and high pressure cleaning systems.

Pump series	FMS
Performance	
max. flow rate	50 m³/h
max. differential head	160 m
max. inlet pressure	8 bar
max. liquid viscosity	250 cP
max. temperature	140°C
impeller type	open
max. free passage	14 mm
max. motor power	45 kW
max. speed	3000/3600 rpm
available frequency	50/60 Hz
Technical specifications	
materials wetted parts	stainless steel 316L or similar
mechanical seal configuration	single, quench, double
available material o-ring	EPDM, FKM
connections	hygienic fittings
surface finish	hygienic quality, internal welds hand polished + electropolished
certificates & legislation	

Performance curves at 2900 rpm

FMS

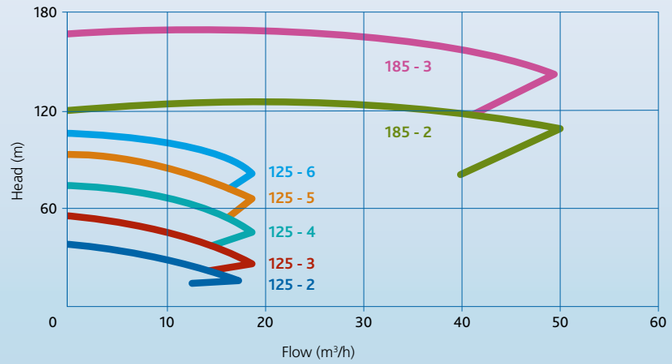

Pump series CRP

Characteristics

The pumps of the CRP series are perfectly cleanable EHEDG certified air handling pumps and are mainly used to pump a mixture of liquid and air. Constructed in thick cold rolled plate, 100% non-porous and extremely smooth.
The pumps have open or closed investment cast impellers, constructed in 316L or duplex materials. Thanks to its crevice-free design and electropolishing as a final surface treatment, the CRP pump series are perfectly cleanable, resulting in a reliable component for your production process.

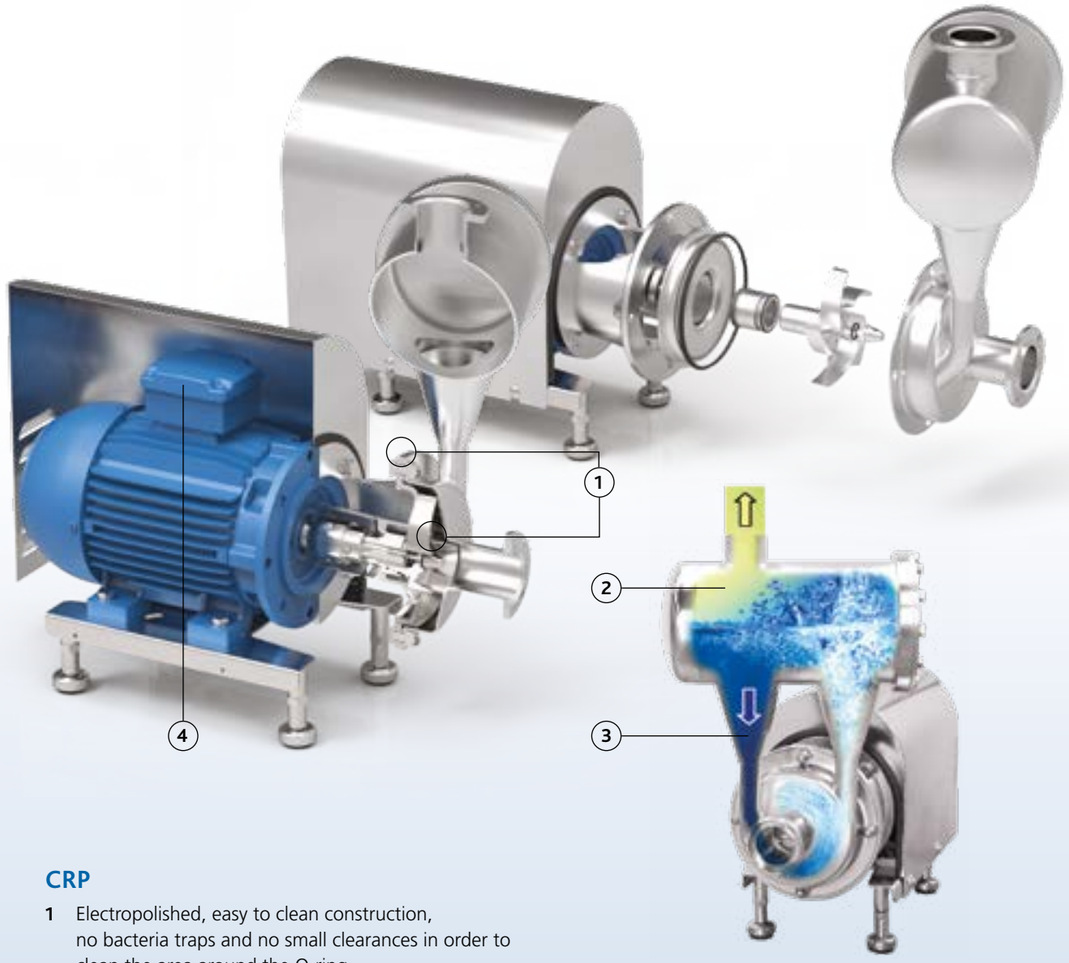

CRP

1. Electropolished, easy to clean construction, no bacteria traps and no small clearances in order to clean the area around the O-ring
2. Unique air handling design with cleanable air separator
3. By-pass to casing taking care about air evacuation
4. Monobloc execution with std. IEC motors
5. Standardized mechanical seals to EN 12756 FDA approved bellow mechanical seals or sterile O-ring seals (spring not in contact with the liquid)
6. One mechanical seal diameter: 33 mm, except for 80-160: Ø 43 mm

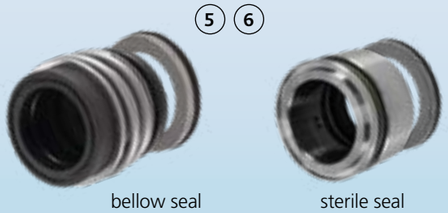

bellow seal

sterile seal

Packo Pumps

Your benefits

- Higher pump efficiency compared with a classic liquid ring pump
- Low NPSH values: less risk on cavitation
- Electropolished: perfectly cleanable
- Easy construction and easy maintenance: less downtime
- Construction without non-return valve
- Easy to install
- 2 mechanical seal diameters for the entire range
- Robust construction
- Limited noise level

Application areas

Thanks to its unique air handling design based on a standard centrifugal pump, the CRP series are particularly suitable as a CIP return pump, as well as for unloading applications.

They are used in the most demanding hygienic applications in almost all industries such as dairies, breweries, beverage industry, distilleries, etc.

Pump series	CRP
Performance	
max. flow rate	120 m³/h
max. differential head	75 m
max. inlet pressure	10 bar
max. liquid viscosity	10 cP
max. temperature	140°C
impeller type	open or closed
max. free passage	22 mm
max. motor power	22 kW
max. speed	3000/3600 rpm
available frequency	50/60 Hz
Technical specifications	
materials wetted parts	stainless steel 316L or similar
mechanical seal configuration	single bellow, sterile, quench, double
available material o-ring	EPDM, FKM, FEP-FKM, FFKM or similar
connections	hygienic fittings only
surface finish	hygienic quality, internal welds hand polished + electropolished (casing: 0.8 µm + impeller: 3.2 µm)
certificates & legislation	

Performance curves at 2900 rpm

CRP

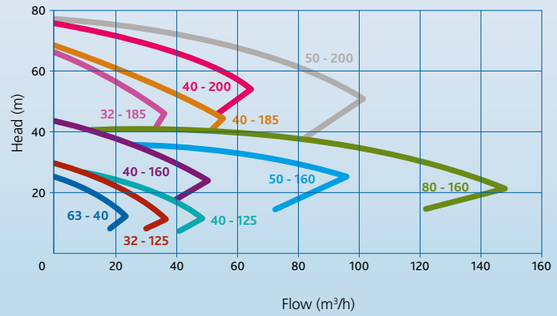

Pump series CRP+

Characteristics

The pumps of the CRP+ series are perfectly cleanable EHEDG and 3A certified air handling pumps and are mainly used to pump a mixture of liquid and air. Constructed in thick cold rolled plate, 100% non-porous and extremely smooth. The pumps have open investment cast impellers, constructed in 316L or duplex materials. Thanks to its crevice-free design and electropolishing as a final surface treatment, the CRP+ pump series are perfectly cleanable, resulting in a reliable component for your production process.

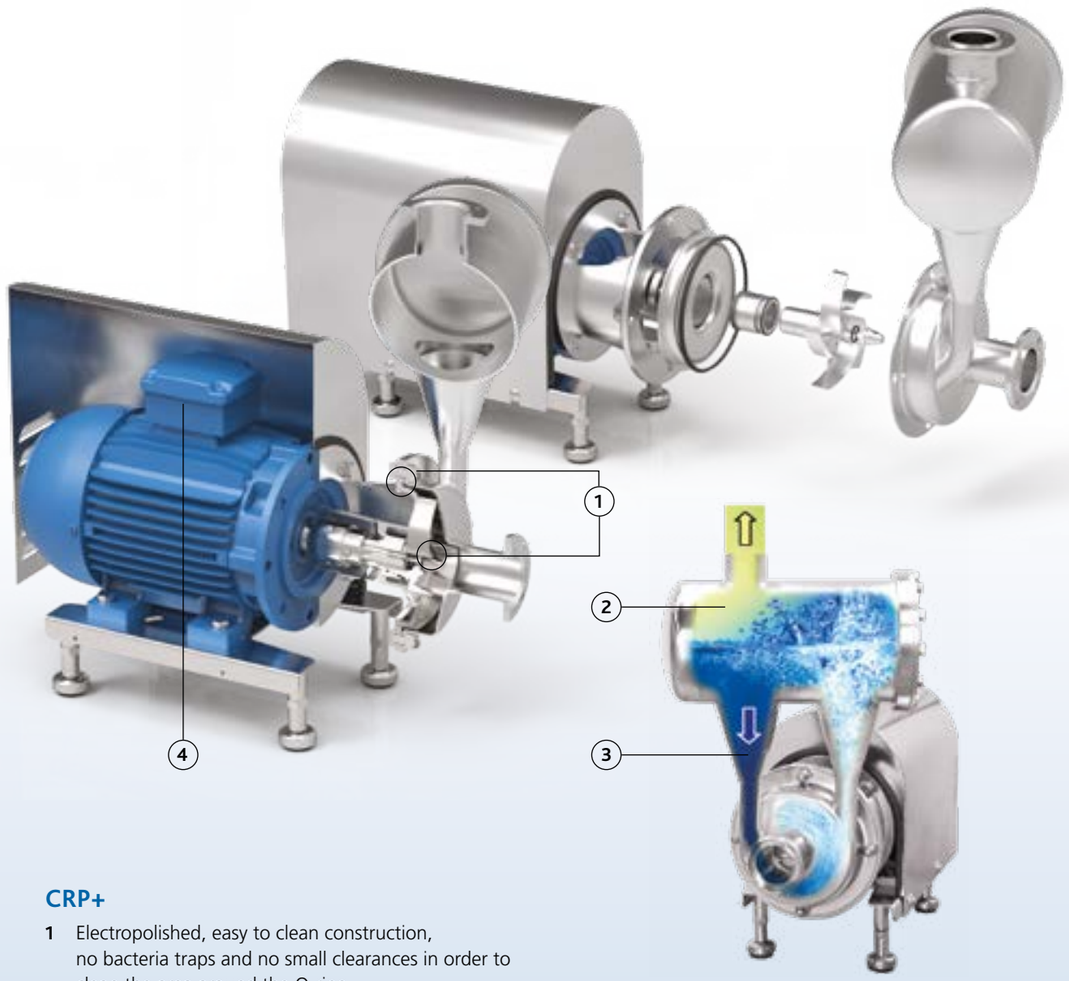

CRP+

1 Electropolished, easy to clean construction, no bacteria traps and no small clearances in order to clean the area around the O-ring

2 Unique air handling design with cleanable air separator

3 By-pass to casing taking care about air evacuation

4 Monobloc execution with std. IEC motors

5 Standardized mechanical seals to EN 12756 FDA approved sterile O-ring seals (spring not in contact with the liquid)

6 One mechanical seal diameter: Ø 33 mm

7 Optional: Novapad seal for applications with poor lubrication

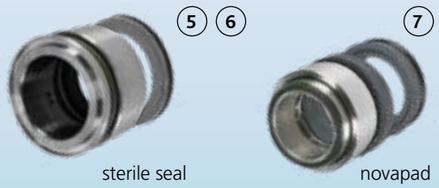

sterile seal novapad

Packo Pumps

Your benefits

- Higher pump efficiency compared with a classic liquid ring pump
- Low NPSH values: less risk on cavitation
- Electropolished: perfectly cleanable
- Easy construction and easy maintenance: less downtime
- Standard components
- Easy to install
- 1 mechanical seal diameter for the entire range
- Robust construction
- Limited noise level

Application areas

Thanks to its unique air handling design based on a standard centrifugal pump, the CRP series are particularly suitable as a CIP return pump, as well as for unloading applications.

They are used in the most demanding hygienic applications in almost all industries such as dairies, breweries, beverage industry, distilleries, etc.

In pharmaceutical and biotech industry they are mainly used for CIP return applications.

Pump series	CRP+
Performance	
max. flow rate	80 m³/h
max. differential head	75 m
max. inlet pressure	10 bar
max. liquid viscosity	10 cP
max. temperature	140°C
impeller type	open
max. free passage	22 mm
max. motor power	22 kW
max. speed	3000/3600 rpm
available frequency	50/60 Hz
Technical specifications	
materials wetted parts	stainless steel 316L or similar
mechanical seal configuration	single bellow, sterile, quench, double
available material o-ring	EPDM, FKM, FEP-FKM, FFKM or similar
connections	3A hygienic fittings only
surface finish	hygienic quality, internal welds hand polished + electropolished (wetted parts 0.8 µm)
certificates & legislation	

Performance curves at 2900 rpm

CRP+

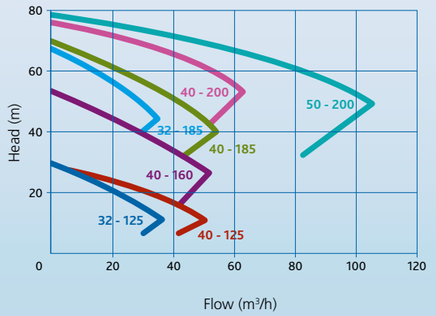

High Shear pump series SFP2 & SFP3

Characteristics

High shear pump with open or closed impeller and patented stator for high flow and pressure. The shear is generated between the rotor and an innovative and optimized perforated stator. The shear can be optimized and increased by raising the speed of rotation. Shear rates up to 100.000 s-1 can be achieved at a maximum speed of 3600 rpm.

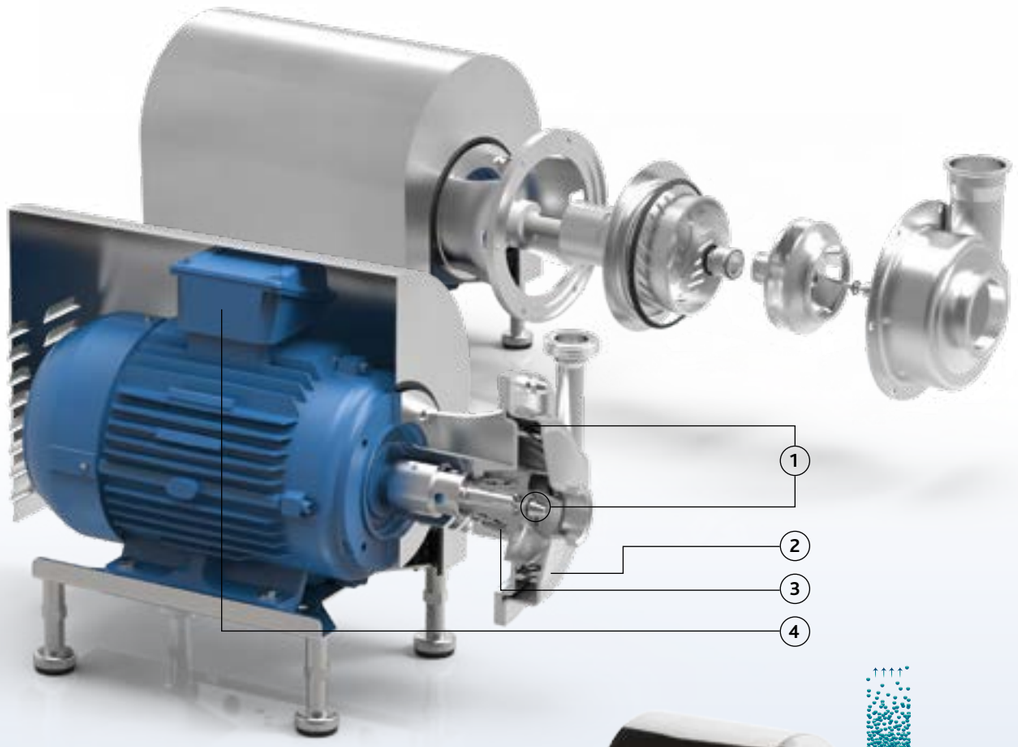

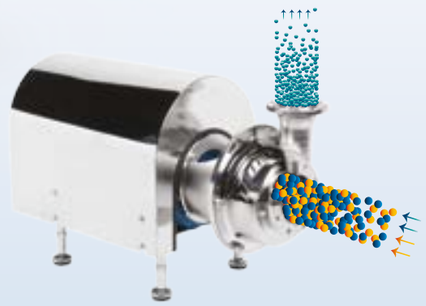

SFP2 & SFP3

1 Electropolished, easy to clean construction, no bacteria traps and no small clearances in order to clean the area around the O-ring

2 Pressed stainless steel in 2B quality plate, extremely smooth

3 Large seal cavity to clean mechanical seal properly

4 Monobloc execution with std. IEC motors

5 Standardized mechanical seals to EN 12756
FDA approved bellow mechanical seals or sterile O-ring seals (spring not in contact with the liquid)

6 2 seal diameters for the entire range:
- SFP2: Ø 33 mm
- SFP3: Ø 43 mm

bellow seal

sterile seal

Packo Pumps

Your benefits

- Shear rates up to 100.000 s-1
- Highest efficiency on the market, energy saving
- Use of std. components
- Self pumping
- Hygienic design, so easy to clean
- Easy installation and maintenance
- Very quiet operation

Application areas

The Packo shear mixer pump is mainly used for in-line mixing, homogenisation and dispergation applications.

Mixing of two liquids:
- with a large different specific gravity,
- having a large different viscosity or
- that are difficult to mix.

Also dispersing of:
- solids in liquids and
- dispersion of gas in liquids.

Pump series	SFP2	SFP3
Performance		
max. flow rate	80 m^3/h	200 m^3/h
max. differential head	40 m	50 m
max. pressure	inlet: 10 bar	discharge: 10 bar
max. shear	100.000 s^{-1}	60.000 s^{-1}
max. liquid viscosity	1000 cP	
max. temperature	140°C	
impeller type	open	closed
max. motor power	22 kW	45 kW
max. speed	3600 rpm	
available frequency	50/60 Hz	
Technical specifications		
materials wetted parts	stainless steel 316L or similar	
mechanical seal configuration	single, quench, double	
available material o-ring	EPDM, FKM, FEP-FKM, FFKM or similar	
connections	hygienic fittings	
surface finish	hygienic quality, internal welds hand polished + electropolished (wetted 0.8 µm - impeller 3.2 µm)	
certificates & legislation		

Performance curves at 2900 rpm

SFP2 & SFP3

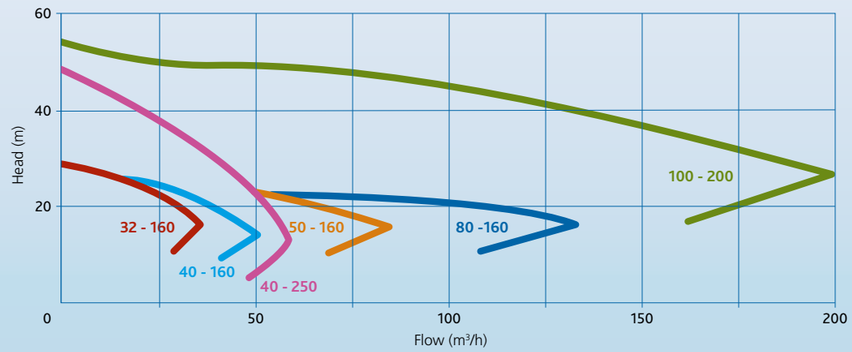

Pump series RMO

Characteristics

This pump serie is especially produced for installation on lorries and trucks and are constructed on a stainless steel bearing pedestal. They can be equipped with an optional hydraulic or electric motor. Pumps provided with an electric motor can be powered by the batteries of the truck and can be executed in a monobloc design.
These perfectly cleanable pumps have stainless steel 316L pump casings constructed in thick cold rolled plate, 100% non-porous and extremely smooth. Some of them have an investment cast casing, resulting in an even more solid design.

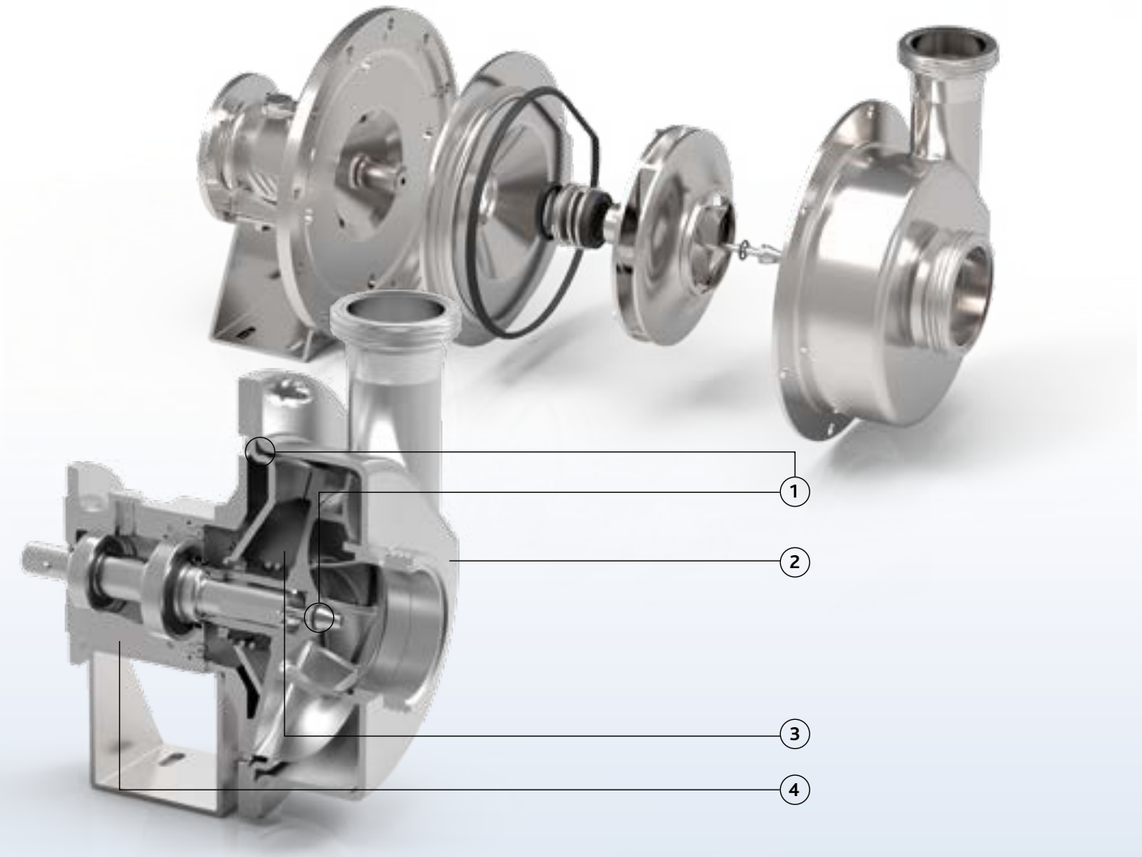

RMO

1. Electropolished, easy to clean construction, no bacteria traps and no small clearances in order to clean the area around the O-ring
2. Pressed or investment cast stainless steel, robust design
3. Large seal cavity to clean mechanical seal properly
4. Cast solid bearing housing with pedestal suitable for hydraulic motor
5. Standardized mechanical seals to EN 12756 FDA approved bellow mechanical seals or sterile O-ring seals (spring not in contact with the liquid)

bellow seal

sterile seal

Your benefits

- High pump efficiency, low motor power
- Low NPSH values: less risk on cavitation
- Short built-in dimensions, space saving
- Robust design, smooth operation
- Higher capacity
- Low noise level

Application areas

The RMO series are used on trucks and lorries for the handling of liquids in the food industry such as milk, beer and wine.

They can also be used for the handling of AD Blue, drinking water and other liquids.

Pump series	RMO
Performance	
max. flow rate	250 m³/h
max. differential head	30 m
max. inlet pressure	3 bar
max. liquid viscosity	500 cP
max. temperature	140°C
impeller type	open / closed
max. free passage	21 mm
max. speed	variable
Technical specifications	
materials wetted parts	316L or similar
mechanical seal configuration	single
available material o-ring	EPDM, FKM
connections	hygienic fittings
surface finish	hygienic quality, internal welds hand polished + electropolished (casing 0.8 µm - impeller 3.2 µm except for MFP series)
drive	hydraulic motor or electromotor
certificates & legislation	

Performance curves at 1450 rpm

RMO

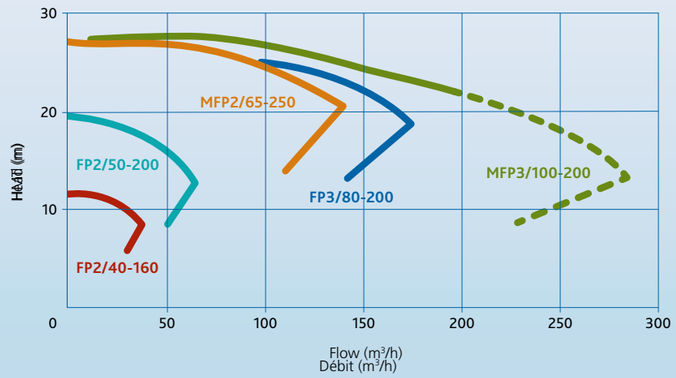

In practice pumps are operating at lower or higher speed depending on the application.

Pump series VPCP

Characteristics

The Packo stainless steel pumps of the VPCP series are the reference in soft and damage free pumping of vegetables, potatoes, mussels, shrimps, etc. Due to the fact that they have an extremely large passage and to its specially designed vane they guarantee a smooth handling of your product.

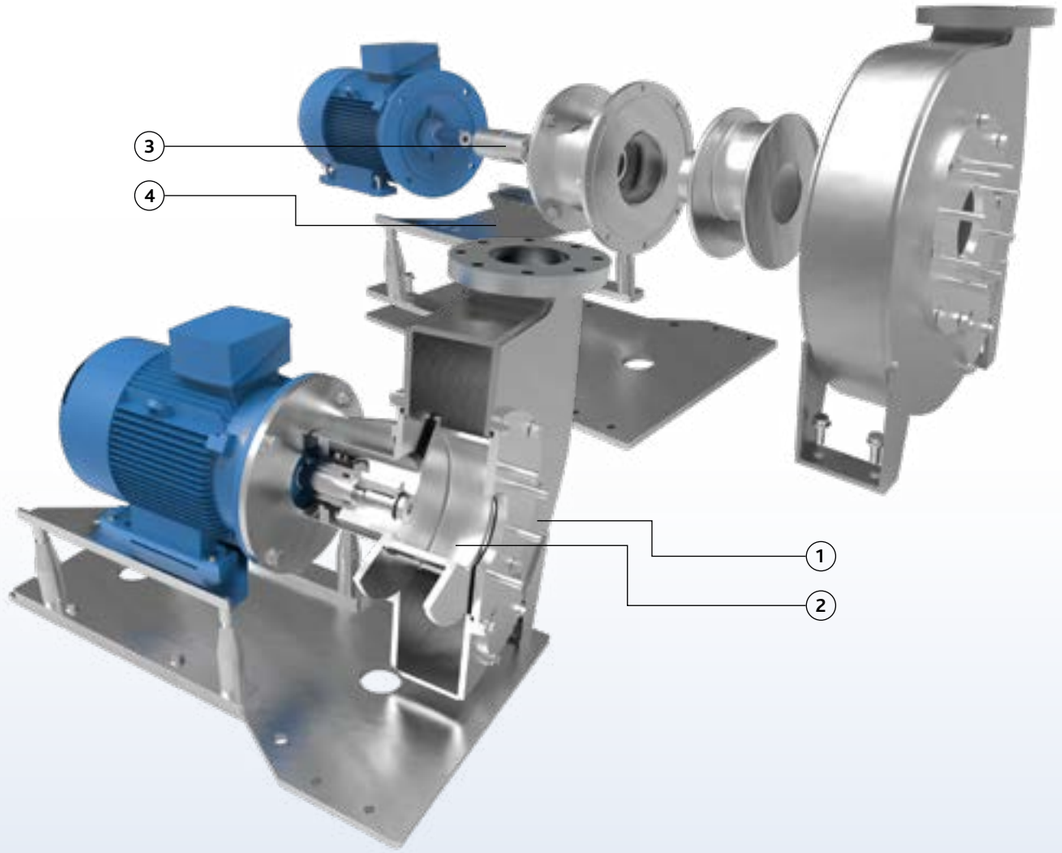

VPCP

1 Electropolished: corrosion resistant, no rusting

2 Especially designed vane with large passage: pumping without product damage

3 Duplex stub shaft allows a quick and easy disassembly of the vane

4 Sledge construction: pump can be easily slid backwards while the pump casing remains in the piping system: short downtimes

5 Standardized FDA approved rubber bellow mechanical seals to EN 12756, 2 sizes for the entire range:
- seal diameter O 80 mm up to 11 kW
- motor power ≥ 18,5 kW: O 110 mm

5

bellow seal

Packo Pumps

Your benefits

- Soft and damage-free pumping
- Easy maintenance: short downtimes
- Extremely large passage
- Electropolished stainless steel 304L: no rusting & easy to clean
- Monobloc design: space saving

Application areas

The Packo VPCP pump range is specifically designed for damage-free pumping of potatoes and vegetables but also seafood such as mussels, cockles and shrimp.

The VPCP pump can be used in Belgian fries process lines, transport of vegetables to blanching lines as well as for transport of pasta from pasta cookers.

Pump series	VPCP
Performance	
max. flow rate	1000 m³/h
max. differential head	20 m
max. liquid viscosity	100 cP
max. temperature	80°C
impeller type	special designed vane
max. free passage	213 mm
max. motor power	55 kW
max. speed	1200 rpm
available frequency	50/60 Hz
Technical specifications	
materials wetted parts	stainless steel 304 or similar
mechanical seal configuration	Single
available material o-ring	NBR (FDA)
connections	industrial
surface finish	industrial finish: welds are not hand polished. final surface treatment: electropolished
certificates & legislation	

Performance curves

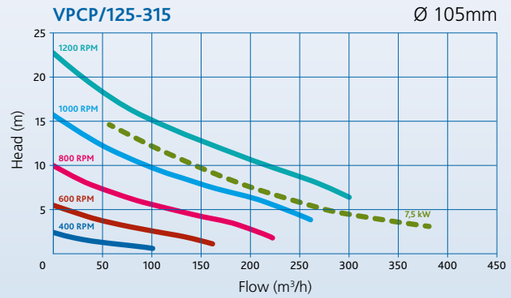

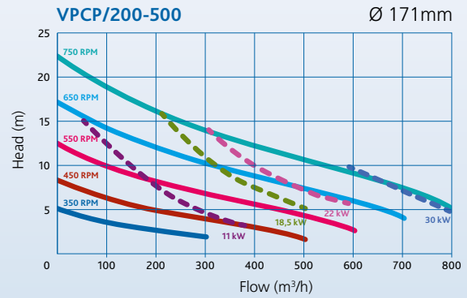

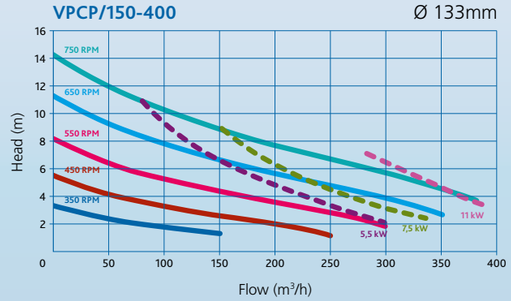

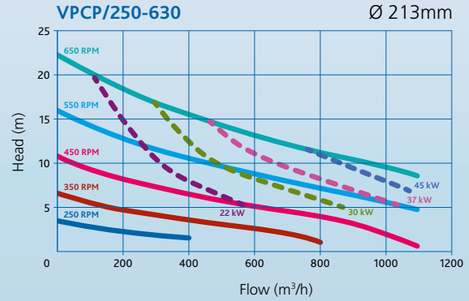

Pump series IMO

Characteristics

The Packo submersible cantilever pump series IMO are suitable for handling liquids with a temperature up to 200°C. They are especially constructed to handle liquids that are difficult to seal such as paints, varnishes, galvanic coatings, hot frying oil, etc.

The pumps are available in cantilever execution up to 0,5 m length.

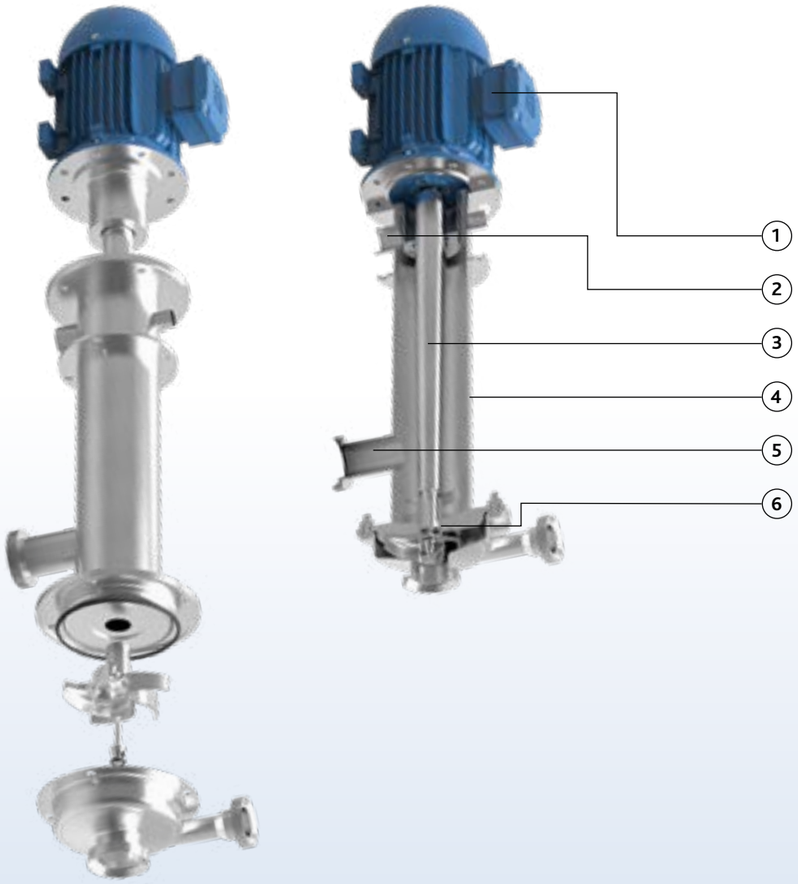

IMO

1 Use of standard IEC motors

2 Connection for cleaning purposes

3 Tapered shaft, fully machined

4 High strength column support pipe. Rigidly maintains alignment between motor and casing. Protects pump shaft.

5 By-pass for overflow

6 Cantilever design = no mechanical seals, no plain bearings. Reduced downtime and operating costs. No bottom bearing, no oil or water pipes required to lubricate these bearings.

Packo Pumps

Your benefits

- Cantilever design = leakage free (no seals and plain bearings)
- Sealless pump: reducing downtime and operating costs
- Electropolished: easy to clean
- Robust design
- Not sensitive for dry running

Application areas

Particularly suitable for pumping liquids that are difficult to seal such as hot frying oil up to 200° C.

They are also used for pumping waste water from industrial waste such as CIP, acids, condensate, etc.

Pump series	IMO
Performance	
max. flow rate	800 m³/h
max. differential head	60 m
max. inlet pressure	atmospheric
max. liquid viscosity	500 cP
max. temperature	200°C
impeller type	open, semi-open, closed
max. free passage	45 mm
max. motor power	110 kW
max. speed	3000 rpm
available frequency	50/60 Hz
Technical specifications	
materials wetted parts	stainless steel 316L or similar
mechanical seal configuration	no seal - cantilever
available material o-ring	FKM - EPDM - Special
connections	industrial or hygienic
surface finish	industrial finish: welds are not hand polished. final surface treatment: electropolished
certificates & legislation	

Performance curves

IMO

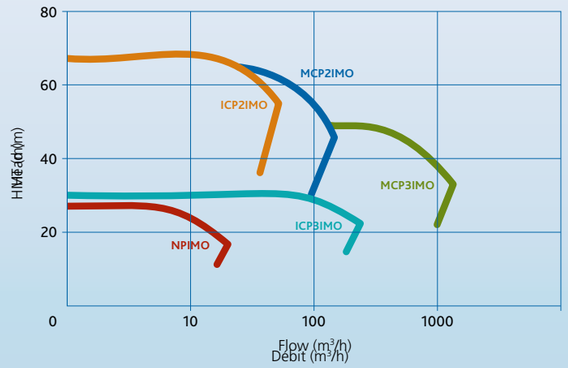

Our wide range of stainless steel pumps

Standard Packo pump range

General industrial pumps

Pump Series NP60
Low cost industrial stainless steel centrifugal pump.
Energy saving thanks to high efficiency.
Easy concept and maintenance.

- Max. flow up to 40 m³/h
- Max. 2.5 bar
- Motor power up to 2.2 kW

Pump Series ICP2 & ICP3
Robust execution in pressed stainless steel 316L.
High efficiency and very low NPSH.
Modular concept composed with standard components.
Easy maintenance.
Available with hygienic fittings, pump series ICP+.

- Max. flow up to 300 m³/h
- Max. 12 bar
- Motor power up to 90 kW

Pump Series ICP1
The best 'value for money' industrial stainless steel centrifugal pump.
Energy-saving with high efficiency.
Modular concept built up with standard components.
Easy maintenance.

- Max. flow up to 55 m³/h
- Max. 4 bar
- Motor power to 5.5 kW

Vortex Pump Series IFF & MFF
Stainless steel vortex pump with recessed impeller.
Ideal as a process pump for pumping liquids with a significant proportion of solids and / or long fibers.
Available with hygienic fittings.

- Max. flow up to 350 m³/h
- Max. 3 bar
- Motor power up to 45 kW

General industrial pumps

Pump Series MCP2
Robust design in cast stainless steel 316L.
Extremely efficient thanks to optimum pump hydraulics.
Modular concept composed with standard components.
Easy maintenance.

- Max. flow up to 120 m³/h
- Max. 6.5 bar
- Motor power up to 22 kW

Pump Series NMS
Multistage pump in an industrial design.
Ideal for moderate flow rate and high pressures.

- Max. flow up to 50 m³/h
- Max. 16 bar
- Motor power up to 45 kW

Pump Series MCP3
Robust design in cast stainless steel 316L.
Extremely efficient thanks to optimum pump hydraulics.
Modular concept composed with standard components.
Easy maintenance.

- Max. flow up to 1700 m³/h
- Max. 7 bar
- Motor power up to 250 kW

Duplex Pump Series MWP2
Robust execution in wear resistant duplex material.
Ideal for pumping erosive / abrasive products.

- Max. flow up to 50 m³/h
- Max. 6 bar
- Motor power up to 11 kW

General industrial pumps

Pump Series IPP2

High pressure pump suitable for system pressures up to 40 bar!
Made of solid, machined stainless steel 316L.
Especially for use in reverse osmosis applications.
Available with hygienic fittings.

- Max. flow up to 70 m³/h
- Max. head of 7 bar
- Motor power up to 22 kW

Selfpriming Pump Series MSP2

Robust execution in cast stainless steel 316L.
Suitable for CIP return, truck unloading etc.
Ideal for pumping air containing liquids.
Available with hygienic fitting.

- Max. flow up to 70 m³/h
- Max. 3 bar
- Motor power up to 11 kW

Air handling Pump Series IRP

Industrial air handling pump for CIP return applications as well as for truck and tank unloading, etc.
High efficiency and low NPSH in comparison with a classic liquid ring pump.
Limited noise level.
Easy maintenance.
Available with hygienic fittings, pump series IRP+.

- Max. flow up to 120 m³/h
- Max. 7 bar
- Motor power up to 22 kW

Submersible Pump Series IM

Available as cantilever pump series IML without mechanical seal or support bushing for insertion length of 0.5 m.
With support bushing for series IMXL with insertion length up to 1.5 m.
Particularly suitable for pumping liquids that are difficult to seal, such as paints, varnishes, galvanic coatings, hot frying oil, etc.

- Max. flow up to 800 m³/h
- Max. 6 bar
- Motor power up to 90 kW

Packo Pumps

A **VERDER** COMPANY

Packo Inox NV • Industriepark Heernisse • Cardijnlaan 10 • 8600 Diksmuide • BELGIUM
Tel. +32-51-51 92 80 • Fax +32-51-51 92 99 • E-mail pumps@packo.com • www.packopumps.com